Northeast Fisheries Science Center Reference Document 19-02

Developing Sampling Strategies to Assess the Penobscot River Estuary (2010-2013)

by Christine A Lipsky, Rory Saunders, Justin R Stevens,
Michael O'Malley, and Paul Music

April 2019

Northeast Fisheries Science Center Reference Document 19-02

Developing Sampling Strategies to Assess the Penobscot River Estuary (2010-2013)

by Christine A Lipsky[1], Rory Saunders[2], Justin R Stevens[3], Michael O'Malley[4], and Paul Music[3]

[1]NOAA National Marine Fisheries Service, Northeast Fisheries Science Center, Maine Field Station, 17 Godfrey Drive, Suite 1, Orono, ME 04473

[2]NOAA National Marine Fisheries Service, Greater Atlantic Regional Fisheries Office, Maine Field Station, 17 Godfrey Drive, Suite 1, Orono, ME 04473

[3]Integrated Statistics under contract to NOAA National Marine Fisheries Service, Northeast Fisheries Science Center, Maine Field Station, 17 Godfrey Drive, Suite 1, Orono, ME 04473

[4]Marine Institute, Rinville, Oranmore, Co. Galway, H91 R673 Republic of Ireland

U.S. DEPARTMENT OF COMMERCE
National Oceanic and Atmospheric Administration
National Marine Fisheries Service
Northeast Fisheries Science Center
Orono, Maine

April 2019

Northeast Fisheries Science Center Reference Documents

This series is a secondary scientific series designed to assure the long-term documentation and to enable the timely transmission of research results by Center and/or non-Center researchers, where such results bear upon the research mission of the Center (see the outside back cover for the mission statement). These documents receive internal scientific review, and most receive copy editing. The National Marine Fisheries Service does not endorse any proprietary material, process, or product mentioned in these documents.

All documents issued in this series since April 2001, and several documents issued prior to that date, have been copublished in both paper and electronic versions. To access the electronic version of a document in this series, go to *http://www.nefsc.noaa.gov/nefsc/publications/*. The electronic version is available in PDF format to permit printing of a paper copy directly from the Internet. If you do not have Internet access, or if a desired document is one of the pre-April 2001 documents available only in the paper version, you can obtain a paper copy by contacting the senior Center author of the desired document. Refer to the title page of the document for the senior Center author's name and mailing address. If there is no Center author, or if there is corporate (*i.e.*, non-individualized) authorship, then contact the Center's Woods Hole Laboratory Library (166 Water St., Woods Hole, MA 02543-1026).

Information Quality Act Compliance: In accordance with section 515 of Public Law 106-554, the Northeast Fisheries Science Center completed both technical and policy reviews for this report. These predissemination reviews are on file at the NEFSC Editorial Office.

This document may be cited as:

Lipsky CA, Saunders R, Stevens JR, O'Malley M, Music P. 2019. Developing sampling strategies to assess the Penobscot River estuary (2010-2013). NEFSC Ref Doc 19-02; 56 p. Available from: National Marine Fisheries Service, 166 Water Street, Woods Hole, MA 02543-1026, or online at https://www.nefsc.noaa.gov/publications/

TABLE OF CONTENTS

INTRODUCTION 1
METHODS 2
Study area description 2
Survey Development 3
Data Collection 3
RESULTS 9
Environmental Monitoring 9
Beach Seine 9
2 m Fyke Net 10
1 m Fyke Net 10
Pelagic Trawl 11
Split-beam Hydroacoustics 11
Avian and Mammal Survey 11
Cross-gear Comparisons 12
DISCUSSION 12
ACKNOWLEDGEMENTS 15
REFERENCES CITED 16

INTRODUCTION

Diadromous fish served a variety of ecological roles at historic (before 1750) abundance levels which benefited human and nonhuman components of inland and ocean ecosystems alike. First, during that period, diadromous fish were important prey for commercially and recreationally valuable fish, terrestrial wildlife, birds, and marine mammals. Indeed, Willson and Halupka (1995) urged consideration of anadromous fish as "keystone" species for vertebrate predators in fresh water because (as prey) anadromous fish were seasonally very abundant, spatially and temporally predictable, and relatively easy to capture. In the eastern United States, alewife (*Alosa pseudoharengus*) and blueback herring ([*Alosa aestivalis*]; collectively, river herring) are thought to have composed a large portion of groundfish (particularly Atlantic cod [*Gadus morhua*]) diets historically, and the substantial declines in abundance of river herring may have negatively affected groundfish populations (Ames 2004; McDermott et al. 2015). Second, several species of diadromous fish, including river herring and sea lamprey (*Petromyzon marinus*), transported marine-derived nutrients (in the form of flesh, gametes, urea, etc.; MacAvoy et al. 2000; Nislow and Kynard 2009). When these fish returned to freshwater to spawn, they added nutrients to the environment, which then became available to other species and may have enhanced primary production of freshwater ecosystems (Durbin et al. 1979; Garman 1992). Third, at historic abundance levels, accumulating evidence suggests that several of these diadromous species (alosines, sea lamprey, and rainbow smelt [*Osmerus mordax*], in particular) provided demographic security to Atlantic salmon (*Salmo salar*) through 4 specific mechanisms: nutrient cycling (i.e., marine-derived nutrient deposition pathways, as mentioned above), habitat conditioning, providing alternative prey for predators of salmon (i.e., prey buffering), and serving as prey for juvenile and adult salmon (Saunders et al. 2006). However, the scope and scale of many of these putative interactions today are relatively unknown because of significant declines in abundance of the species involved. Indeed, many diadromous fish populations across the North Atlantic are at or near all-time lows (Limburg and Waldman 2009).

Atlantic salmon are currently listed as endangered in the United States, largely because of dams and low marine survival (USOFR 2009). Annual adult returns to the Penobscot River, Maine, were historically estimated to be 100,000 (Foster and Atkins 1867) but have averaged less than 1,200 over the last 20 years (USASAC 2016). The Penobscot River is currently home to 70%-90% of Atlantic salmon returning to the United States from their marine environment. Salmon survival is dependent on successful migration to and from the marine environment. Estimates of marine survival rates that include estuarine and coastal mortality have been critically low since the early 1990s (Chaput et al. 2005). Understanding the factors behind these low return rates of Gulf of Maine Atlantic salmon is a management priority. Recent advances in our understanding of inter-specific linkages have pointed toward the estuary and near-shore environments as critical to shaping Atlantic salmon population dynamics. For example, Atlantic salmon smolts have been shown to experience relatively high mortality rates as they migrate through estuaries and transition to life at sea (Lacroix et al. 2005; Kocik et al. 2009). One source of smolt mortality is predation, which may be compounded by physiological stress (McCormick et al. 1998). Predators of salmon smolts in the Gulf of Maine include birds (Blackwell 1997), marine mammals (Whoriskey et al. 2006), and piscivorous fish (Friedland et al. 2012). The magnitude of this impact may be temporally and spatially variable, but few studies have investigated this assumption (review in Ward and Hvidsten 2011).

In light of the plight of Atlantic salmon and other diadromous fish, the Penobscot River's production potential and its relatively low degree of fragmentation (Martin and Apse 2011) have fostered focused diadromous fish restoration efforts in recent years. These efforts include the Penobscot River Restoration Project (PRRP), which removed the 2 lowermost mainstem dams in the system and improved fish passage at 2 other dams (Day 2006). This project opened up 15 kilometers of free-flowing riverine habitat to diadromous fish and improved upstream access to thousands of kilometers of habitat (Trinko Lake et al. 2012). Concurrently, efforts to increase abundance through river herring translocation and improved passage are underway (Maine Department of Marine Resources [MDMR] and Maine Department of Inland Fisheries and Wildlife [MDIFW] 2009).

While many of the putative benefits of the restoration of diadromous fish to the Penobscot River are likely to accrue in fresh water, others may occur in the estuary and marine environment. For example, for prey buffering to occur, Atlantic salmon smolts and river herring need to overlap in time and space. An opportunity for this to occur is likely in the estuary because of the timing of smolt emigration and river herring immigration (Saunders et al. 2006). Thus, monitoring fish abundance, distribution, and environmental conditions in the Penobscot River estuary may reveal connections between Atlantic salmon population dynamics and other diadromous fish as restoration efforts proceed. Studies in this particular estuary have primarily focused on 1 or 2 species (i.e., American shad [*Alosa sapidissima*], Grote et al. 2014; Atlantic salmon, Stich et al. 2015; sturgeons, Fernandes et al. 2010). These studies have also been limited both spatially and temporally. No comprehensive ecosystem studies have occurred since NOAA's Estuarine Living Marine Resources Program report was published in 1994 (Jury et al. 1994).

In 2010, we initiated this survey with an overall goal of examining broad patterns of the spatial and temporal distribution and relative abundance of fish populations, their predators, and environment within the Penobscot River estuary as restoration efforts proceed. To address this goal, we first needed to determine the feasibility of monitoring this dynamic ecosystem, particularly in light of the challenging environmental conditions. The following sections of this paper describe the methods, results, and outcomes of initial feasibility testing and sampling in the Penobscot River estuary from 2010 to 2013. All our data are available by request for additional analysis, and much is synthesized in this document to frame these collections.

METHODS

Study Area Description

The Penobscot River is the largest river wholly within Maine, with a drainage area of over 22,000 km^2. The average precipitation is 104 cm per year (NOAA 1998), producing an average discharge in the Penobscot of 465 m^3/s (Penobscot Department of Natural Resources 2001). The estuary is approximately 50 km in length from the head of tide near Bangor to Fort Point (Figure 1). Tidal range for the estuary is approximately 3.5 m (Metcalf & Eddy Inc 1994). The Penobscot River estuary is a drowned river estuary (O'Malley et al. 2017), and it has a relatively narrow basin (1.8 km; Haefner 1967). It has an average depth of 8 m, a maximum depth of 30 m, and a surface area of 105 km^2 with a volume of 850 million m^3 at mean low water (Metcalf & Eddy Inc 1994).

The estuary has a complex mixing regime that varies with freshwater discharge, tidal height, temperature, and salinity conditions (Haefner 1967). Stratification of density layers is common throughout the estuary. Stratification can become more defined during high freshwater flows when the freshwater and marine temperature differentials are greatest, depending on the

tides. A “salt-wedge” is evident in the Winterport area (Figure 1) when a density differential caused by salinity and temperature forms (Haefner 1967).

Our study area extends from the head of tide near Bangor, seaward to Fort Point (Figure 1). The study area is divided into 3 ecologically differentiated zones which we delineated into generalized salinity gradients. These zones are referred to as the upper estuary which is mainly tidal freshwater, middle estuary which has salinity of 0-15 ppt, and lower estuary with a typical salinity of 10-30 ppt (Haefner 1967; Figure 1).

Survey Development

We began the estuary survey in 2010 with feasibility testing of gears and study plan development. Our initial objective was to safely investigate appropriate gear types to sample fish in different estuarine habitats throughout the study area and to evaluate needed resources (time and personnel) and gear effectiveness. In addition, minimizing interactions with protected species was a consideration in determining the gear to evaluate. This process was iterative as we worked with permit authorities to ensure minimal impact in light of the number of protected species in the system and the unknown interaction potential with our gear. We evaluated the feasibility of using active (trawl and seine) and passive (fyke nets) fish capture gear, mobile and fixed visual surveys for birds and mammals, and mobile hydroacoustics.

In 2010, we focused on site selection for beach seines and fyke nets, and we collected environmental data to ensure a distribution of sites along the salinity gradient and to characterize environmental conditions in the estuary. In 2011, we collected environmental data, we continued beach seining at established sites, and we continued fyke net site evaluation. We also added the development of trawl and hydroacoustics method standardization. Additionally, we counted birds and marine mammals upon approach to fish sampling surveys, during mobile hydroacoustic surveys, while using a camera trap, and through point counts. In 2012, we implemented a survey from May to October using beach seines, 2 sizes of fyke nets, surface trawls, and mobile hydroacoustics; counted birds and mammals during mobile hydroacoustic surveys and with a camera trap; and continued collecting environmental data. In 2013, we reduced project scope and limited our sampling to trawling and acoustic surveys, with coinciding avian and mammal observations and environmental monitoring.

Data Collection

Environmental Monitoring

We used several strategies to conduct environmental monitoring. We sampled physical properties of water quality during fish sampling events. We also conducted continuous stationary environmental monitoring in collaboration with Maine Maritime Academy at 2 fixed sites within the estuary to monitor tidal and seasonal variability. Monitoring was also conducted in conjunction with hydroacoustic surveys.

We used a handheld multimeter probe (YSI model 85) to measure surface temperature, salinity, and dissolved oxygen (DO) during each fish sampling event with all gears from 2010 to 2013. The handheld probe was calibrated for 100% DO each sampling day.

In 2011, we continuously monitored environmental conditions in approximately 20 m of water at 2 locations in the middle estuary: Bowden Point (44°36’29”N, 68°50’40”W) and Harriman Cove (44°35’03”N, 68°49’03”W). A YSI model 6920 multimeter collected temperature, salinity, DO, turbidity, and pH every 30 minutes at Bowden Point. A Wetlabs ECO FLNTU single-angle sensor collected chlorophyll fluorescence and turbidity data every 15 minutes at the

Harriman Cove site. An RBR logger was also deployed at Harriman Cove to measure salinity and temperature every 30 minutes. At both sites, the probes were positioned at a depth of approximately 2 m below the surface.

In conjunction with hydroacoustic surveys in 2011, 2012, and 2013, we monitored surface temperature, salinity, DO, turbidity, and pH at a frequency of 1 sample per minute by using a data logging multimeter (YSI model 6920).

Environmental data that were collected during fish sampling surveys were summarized by number of events where temperature, salinity, and DO were all collected, by year and month by zone. Data collected during hydroacoustic surveys were summarized by number of surveys conducted by month and year. Data collected from continuous monitoring stations were not analyzed but are archived and available for use by others.

Beach Seine

In 2010, after evaluating sampling at 21 sites, we determined that only 12 were suitable for beach seining, and so they were selected as index sites that would be sampled with beach seines on a recurring basis; 4 sites were in the lower estuary, 3 in the middle estuary, and 5 in the upper estuary. We sampled 7 - 12 index sites weekly from August until the beginning of November in 2010. Sampling occurred at or near low tide, over 2-3 days (Figure 2).

In 2011, we conducted biweekly beach seine surveys from April through October at 9-12 index sites in collaboration with Maine Department of Marine Resources (MDMR). Our last year of seining was 2012, with biweekly sampling from July to October, and we sampled only the 8 middle and upper estuary index sites.

Throughout the survey we used 2 different beach seines. Both beach seines were 45.7 m by 2.4 m with a tapered 2.4 m bag, a weighted footrope, and floats on the headrope (Figure 3). Wooden poles were lashed to the ends of each beach seine to aid in net handling. Seine A was constructed of 4.75 mm mesh throughout. Seine B had 6.35 mm mesh wings and a 1.59 mm mesh bag. Both beach seines were deployed by using the perpendicular set method (Hahn et al. 2007), by either wading or via a small boat (Hayes et al. 1996). Sampling was conducted within 1 hour of slack low tide to reduce the effect of the current interfering with the functioning of the net.

All fish and crustaceans were identified to lowest possible taxon and counted. We measured total length to the nearest millimeter for a subset of 30 animals of each species. Exceptions were that we measured fork lengths for Atlantic salmon and carapace width for all crabs. The catch was released alive immediately after sampling.

We summarized the data by total catch by species by year, percent of annual catch by species, number of individuals measured by species by year, and minimum and maximum total length of measured individuals of each species by year. We summarized effort by number of seine hauls for each of the 2 nets by month and year by zone. We calculated catch per unit effort (CPUE) for each of the 2 seine nets as the number of fish captured per seine haul, and CPUE was summarized as the monthly mean by year and zone.

2 m Fyke Net

We conducted feasibility testing with 2 m fyke nets in May 2011 with the goal of locating sites with suitable substrate and depth for net deployment, as well as a representative spatial distribution throughout the estuary. We also refined methodology for deploying and anchoring nets given the challenge of a 3.5-meter tidal range compounded with variable river discharge.

In 2011 we conducted gear trials at 6 sites and limited our sets to 12 hours in accordance with sampling permits. In 2012, we selected 1 middle estuary site (Chipmans Point) and 1 upper

estuary site (Snub Point; Figure 4), which could be fished concurrently, as index sites because of their suitability for deploying and retrieving gear. We implemented a full season of sampling with 2 m fyke nets at these sites, and we conducted 24-hour sets as noted in our revised permit.

The 2 m fyke nets were constructed of successively smaller painted square metal tube frames surrounded with 1.9 cm mesh net (Figure 5). Two 9.1 m wings extended from the opening of each fyke at an angle of approximately 60° when set. A central lead of 18.2 m extended perpendicularly from the shore to the first frame of the net (O'Neal 2007). The wings and lead had a weighted footrope with floats on the headrope and were of the same height as the fyke itself (2 m). Each net had 2 square throats tapering to an opening of 45.7 cm. The final compartment of the net was configured with a rigid, framed live-car structure (2 m x 2 m x 3 m) at the surface for removal of catch directly from above without having to haul the entire fyke net. An exclusion device constructed of a vertical and horizontal grid of 6.4 mm aluminum bars with 15.2 cm spacing was attached to the outermost throat of the 2 m fyke net in 2011 to prevent entry of mammals, birds, and large Atlantic sturgeon (*Acipenser oxyrinchus*) and shortnose sturgeon (*Acipenser brevirostrum*; Figure 5).

In 2011, prior to fyke net deployment, a Vemco VR100 telemetry receiver was used for a minimum of 10 minutes to detect acoustically tagged sturgeon in the vicinity. If sturgeon were detected, we moved to a different location to avoid them. After a season without sturgeon interactions, this restriction was removed from our permit, and there was no acoustic monitoring associated with gear deployment in 2012.

The 2 m fyke net was set from slack low tide to slack low tide (12 or 24 hours). We set the fyke net in approximately 0.5 m of water at slack low tide, which was a sufficient depth to ensure that the live car remained underwater. The wings and lead were secured to the shore to maintain their position by using eyebolts fixed to rocks, and the cod-end was attached to a buoy and anchor with 30-50 m of line. Fish and crustaceans were identified, enumerated, and measured as described in the Beach Seine section.

Only data from fyke net sets at the 2 index sites (Chipmans Point and Snub Point) are included in summaries. We summarized catch by number of fish and crustaceans caught by species by year, percent of annual catch by species, number of fish and crustaceans measured by species by year, and minimum and maximum total length of measured fish and crustaceans of each species by year. We summarized effort by number of 12-hour sets and number of 24-hour sets by month and year by zone. We calculated CPUE as the number of fish captured per 12-hour or 24-hour set, and CPUE was summarized as the monthly mean by year and zone.

1 m Fyke Net

In 2010, we conducted initial feasibility testing with 1 m fyke nets at sites in the eastern channel of Verona Island (Figure 1) in September and October. Testing involved deploying the net on various substrates at a range of depths.

In 2011, we improved upon and finalized deployment protocols after making several gear modifications including anchor attachment configuration. Given the relatively small size of the gear, we determined that the most effective sites were along shallow (<1 m) draining intertidal flats where we could position the gear in a thalweg of the flat. We selected 1 middle estuary site (Marsh Stream) and 1 upper estuary site (Bald Hill Cove; Figure 4) which could be fished concurrently. All sets in 2011 were approximately 6 hours long in accordance with permitting restrictions.

In 2012, we were permitted to set each 1 m fyke net for 24 hours (2 full tidal cycles). The 24-hour sets allowed for the capture of fish during both the nighttime and the daytime, which was not possible with the shorter sets in previous years.

The fyke nets were constructed of successively smaller square frames beginning with a 1 m frame at the mouth; the frames were surrounded with 0.6 cm mesh net. Captured fish passed through 2 square 15.2 mm throats before becoming trapped in the cod-end. Two 9.1 m wings extended from the opening of each fyke at an angle of approximately 30° when set. The wings had a weighted footrope and floats on the head rope and were of the same height as the fyke itself (1 m). Anchors were attached to the wings and cod-end with 10 m of line (Figure 6).

We deployed nets at slack high tide by setting wing anchors and then stretching the net out by pulling the cod-end anchor. The nets were set in areas deep enough to ensure that they remained partially submerged at low tide. Upon retrieval, each net was hauled into the boat, and the captured fish were worked down from the neck of the net, then taken directly from the cod-end, and processed in the boat. Fish and crustaceans were identified, enumerated, and measured as described in the Beach Seine section.

We summarized catch by number of fish and crustaceans caught by species by year, percent of annual catch by species, number of fish and crustaceans measured by species by year, and minimum and maximum total length of measured fish and crustaceans of each species by year. We summarized effort by number of 6-hour sets and 24-hour sets by month and year by zone. We calculated CPUE as the number of fish captured per 6-hour or 24-hour set, and CPUE was summarized as the monthly mean by year and zone.

Pelagic Trawl

We conducted 7 trawl surveys from May to July 2011 to evaluate the feasibility of using this gear in the Penobscot estuary environment. Protocols pertaining to net configuration, tow speed, tow direction, and tow duration were developed over the course of 43 tows, which were conducted over a wide variety of hydrologic and environmental conditions. Through this process, we then selected 8 index tows that, together, would compose a complete estuary survey. Four of the tows were in the middle estuary, and 4 were in the lower estuary (Figure 7). We did not trawl in the upper estuary for several reasons. Because the upper estuary is relatively shallow with high debris loads littering the river floor, there was the strong possibility that interactions with the river floor would rip the net, making trawling both difficult and dangerous. The second reason was that we needed to avoid the area south of Bald Hill Cove (Figure 2) to avoid sturgeon interactions. We also visually monitored for the presence of marine mammals during trawl surveys. When mammals were observed, gear was not deployed, and tows would be abandoned if a marine mammal entered the swept area of the net.

We conducted complete trawl surveys on 10 dates in 2012 and 2013. Surveys occurred weekly from late April to the end of May (during the smolt migration window) and approximately monthly thereafter.

Trawling was conducted with a Mamou surface trawl (Innovative Net Systems, Milton, Louisiana), which is a modified 2 seam shrimp trawl (Figure 8). The net was constructed of two 19 mm diamond stretch mesh panels of High Density Polyethylene. The cod-end was made of 6.35 mm nylon mesh and was fitted with a rigid aquarium which was a 2/3 scale version of the aquarium described by Sheehan et al. (2011; Figure 9). The aquarium was constructed of aluminum plate stock and had a flared mouth opening of 0.36 m. The interior dimensions were 0.34 m x 0.55 m x 1.3 m with an interior volume of approximately 0.24 m^3. We attached a rigid buoy (0.15 m x 0.33m) to each corner of the aquarium to increase buoyancy.

The headrope was 9.8 m long with oblong floats placed every 0.3 m. The footrope was 10.4 m with an attached 6.35 mm galvanized chain. The side net height was 3.7 m for a maximum opening height of 6 m. A set of buoyant wooden doors (1.07 m x 0.51 m) spread the net while allowing the net to fish at the surface. The net was bridled to the doors with 27 m of 12.7 mm braided line. The doors were attached to 9.5 mm cable (tow warp), and 91.4 m of this warp was deployed. We trawled with an 11 m Duffy lobster boat. The relatively small net size prevented using net mensuration equipment, but net configuration was monitored with Onset Model# U20-001-02-Ti depth loggers (Onset Computer Corporation, Bourne, Massachusetts) attached at the midpoint of the headrope and footrope to determine whether the net was properly opened during each tow. Tows where net height (difference from top to bottom rope) was less than 1 m were discarded in data postprocessing.

We towed on a flood tide while traveling upstream (i.e., with the tide) during daylight hours. We sampled each tow at approximately similar tidal period. Water velocity varied with changes in river discharge and tidal cycle, and we therefore varied vessel speed between 3.7 and 7.4 km/h to maintain a consistent net speed. To maximize capture efficiency, we towed the net to the right or left of the vessel wake. The tows ranged from 0.3 to 3.6 kilometers (5 to 20 minutes) depending on current velocity and bathymetry. Tow distance was determined by using a GPS-enabled computer which recorded a position once every second. ESRI ArcGIS Desktop: Release 10 (Environmental Systems Research Institute, Redlands, CA) software was used to compute the length of a line intersecting all the points.

Fish and crustaceans were identified, enumerated, and measured as described in the Beach Seine section. When there were differences in size classes within a species (e.g., juvenile and adult alewives), we treated each of the size classes as a species and measured 30 of each size class. When the number of individuals of a species exceeded what could be counted in a timely manner, a subsample of 100 individuals from the catch was retained and measured, and the total count and length frequency distribution were estimated from this subsample. If fish were impinged in the net, the number of fish was visually estimated and was recorded as an estimate.

We summarized catch by number of fish caught by species by year, percent of annual catch by species, number of fish measured by species by year, and minimum and maximum total length of measured fish of each species by year. We summarized effort by number of trawl tows by month and year by zone. We calculated CPUE as the number of fish captured per tow, and CPUE was summarized as the monthly mean by year and zone.

Split-beam Hydroacoustics

In 2011, we developed spilt-beam hydroacoustic methods for a mobile transect survey application. That first year of sampling focused on feasibility and methods development; sampling did not occur on a regular basis. In 2012 and 2013, we conducted systematic sampling beginning with ice-out (March/April) and ending with ice-in (November). Sampling occurred weekly in the spring (during the active period of migration of adult and juvenile diadromous species, usually from late April until June) and biweekly thereafter.

We conducted mobile transects from Fort Point to the Rt. 395 Bridge in Bangor (Figure 1), using mobile split-beam echo sounders (Simrad EK60 General Purpose Transceivers [GPTs]) with 38 kHz (circular 12 ±2°) and 120 kHz (circular 7 ±1°) operating frequencies. The transducers were frame-mounted from the side of a 6 m Pacific Skiff. Transducer faces were mounted 0.5 m below the surface of the water and 35 cm apart (on center). A laptop with an internal Global Positioning System (GPS) receiver was used to collect location information. Data were stored on the hard drive of that laptop. The entire system was powered by a deep cycle 12V

DC battery (independent of vessel electronics). Echosounder parameters for both frequencies were: 0.256mS pulse duration, 4Hz ping rate, and 500W power (Table 1).

The spilt-beam hydroacoustic survey design was systematic along predetermined zigzag transects in 2012-13 (Figure 10). We set waypoints on both sides of the estuary in water no less than 6 m depth (mean low water). Waypoints were saved to the onboard GPS unit of the boat for subsequent surveys. Each transect across the estuary was recorded as a separate data file. The estuary in the region of interest (area of estuary with depths greater than 6 meters where transects occurred) had an area of approximately 16 km^2 (8.25 km^2 in the lower estuary zone, 4.5 km^2 in the middle estuary zone, and 3.25 km^2 in the upper estuary zone). The average time to complete a survey was approximately 6 hours at an average boat speed of 8 km h^{-1}, and each survey covered a linear distance of 50 km. Twenty-two kilometers were in the lower estuary zone, 15 in the middle zone, and 13 in the upper zone. Surveys were completed during daylight and in the direction of tidal flow. Standard calibrations were done monthly prior to a survey with the Simrad LOBE program in slack tide conditions using a 38.1 mm tungsten carbide standard target (SIMRAD 2012).

Raw data from the 2 frequencies were downloaded after each survey and were archived and backed up daily. Effort was summarized by survey distance covered by date.

Avian and Mammal Survey

In 2011, we developed and implemented avian and marine mammal survey methods including point counts, fixed camera traps, observations concurrent with beach seine surveys, and observations concurrent with hydroacoustic transect surveys. The most consistent and frequent census occurred during hydroacoustic transect surveys from 2011-2013.

Point count surveys of birds and marine mammals were conducted at 21 index sites throughout the estuary in 2011 (Figure 11). Eight of the point count sites were also beach seine sites, but all of the avian and marine mammal count sites were accessed from shore. Upon arrival at each site, we recorded date, time, weather, tide, and other environmental conditions. The observation period was 5 minutes, and we used 10x50 magnification binoculars to count all birds in the area and identify them to the lowest possible taxon. We also noted sex and age or maturity, if possible. We noted the primary behavior of the species (e.g., foraging, roosting, flying), and in the case of roosting, we noted the type of roost (tree, rock, or pylon). We identified marine mammals by species, counted them, and recorded information on their behavior.

We used camera traps to monitor a known resting site of Double-crested Cormorants (*Phalacrocorax auritus*) in Hampden, Maine (44° 46' 24" N 68° 47' 15" W; Figure 11) in 2011 and 2012. Use of the resting site was remotely monitored with a Nikon Rebel 35mm digital camera with a Harbortronics Digisnap 2000 shutter release. It was housed in a waterproof case and was powered by an external gel battery with a solar panel. We programmed the camera to take 1 image every 15 minutes from dawn to dusk, and we downloaded the images weekly.

Birds and marine mammals were also counted on boat approach to every beach seine site in 2011. The boat was slowed to idle approximately 150 meters from the site to minimize disturbances to birds and marine mammals in the area. We scanned the area from bank to bank and 100 meters upstream and downstream. We counted the birds and marine mammals and identified them to lowest possible taxon within this zone. We did not use binoculars, so smaller species such as passerines and sandpipers may have been missed. However, some species, such as Double-crested Cormorants, gulls, crows, and raptors are large enough to have been seen with the naked eye from that distance.

Avian and marine mammal surveys were also conducted during hydroacoustic transect surveys for the entire survey (Figure 10). We used 10x50 magnification binoculars to survey both sides of the river and ahead of the boat for birds and mammals, continually scanning as the boat proceeded along the transect line. We recorded all bird and marine mammal species in or immediately above the river or using the banks of the river, and their primary (i.e., swimming, flying, and stationary) and secondary (i.e., foraging, resting) behavior. Time of each observation was recorded to the nearest minute. The observations and time were joined with the waypoint data from the GPS to geospatially assign observations. The width of the estuary allowed for accurate observation from shore to shore for the middle and upper estuary, but surveys of wider sections in the lower estuary were considered sample counts and not a census of animals across the width of the estuary at the survey site. The speed of the boat allowed for approximately 200 m to be traveled in 1 minute, and most birds and marine mammals were observed well within 200 m. Effort was made to avoid counting birds multiple times in the same area by tracking activity as much as practical.

Birds and marine mammals were identified to the lowest possible taxon. Effort of sightings that occurred during point counts was summarized by number of events by month. Effort of sightings that occurred during seine surveys was summarized by number of events by month. Effort during hydroacoustic surveys was summarized by number of surveys by year and month. Mammal data were summarized by number of each species per survey. Bird data were summarized by number of Double-crested Cormorant sightings per survey and mean number of Double-crested Cormorant sightings per month and year.

RESULTS

Environmental Monitoring

We measured surface temperature, salinity, and DO during 506 fish sampling events from 2010 to 2013. Sampling was conducted August through November in 2010, April through October in 2011, May through October in 2012, and in April and May in 2013 (Table 2). These were all point data (collected at a single point in space and time). One-fifth of the sampling events occurred in each of May and September, and overall, the samples were evenly distributed among all 3 estuary zones.

We continuously monitored several water quality parameters at 2 locations. The Harriman Cove site was monitored with a Wetlabs ECO FLNTU sensor from May 2011 to June 2011, and with a conductivity, temperature, and depth sensor (CTD) from May 2011 to June 2011. The Bowden Point site was monitored from April 2011 to October 2011. These data are available by request.

We collected temperature, salinity, DO, turbidity, and pH data during 38 hydroacoustic surveys in 2011, 2012, and 2013. The only months that data were not collected during hydroacoustic surveys were November and December 2011. In May we collected data from 6 surveys in 2012 and 6 surveys in 2013; in all other months with surveys, we collected data during 1, 2, or 3 surveys (Table 3). Salinity data are summarized in O'Malley et al. (2017).

Beach Seine

We deployed beach seines a total of 348 times from 2010 to 2012 at 12 sites (Table 4). Mean number of fish caught per seine haul (CPUE) for Seine A ranged from 1.0 (upper estuary; April 2011) to 233.3 (middle estuary; June 2011; Table 5). CPUE for Seine B ranged from 4.3

(upper estuary; October 2012) to 390.8 (middle estuary; August 2011; Table 6). Seine A CPUE was generally lowest in April and May. For Seine A, CPUE in the middle estuary was lower than that of the other 2 zones in April and higher than that of the other zones in June 2011 and September 2011. Seine B CPUE was generally highest July through September, and in the middle estuary it was higher than that of the upper estuary in all sampling months except August 2012.

We caught over 41,000 fish and crustaceans in beach seines, comprising over 50 different species including 7 species of diadromous fish (Table 7). In Seine A, diadromous fish composed 4.4%, 30.5%, and 51.7% of the overall catch in 2010, 2011, and 2012, respectively. In Seine A, rainbow smelt was the most abundant diadromous species in 2010 and 2012, and blueback herring was the most abundant diadromous species in 2011. In Seine B, diadromous fish composed 11.7% and 36.3% of the overall catch in 2011 and 2012, respectively. In Seine B, American eel (*Anguilla rostrata*) was the most abundant diadromous species in 2011, while blueback herring was the most abundant diadromous species in 2012.

Overall, the most abundant species (including diadromous and non-diadromous species) captured in Seine A in 2010 and 2011 was Atlantic silverside ([*Menidia menidia*]; 34.3% and 20.3%, respectively), and in 2012 the most abundant species was rainbow smelt (25.3%; Table 7). Overall, the most abundant species captured in Seine B in 2011 and 2012 was mummichog ([*Fundulus heteroclitus*]; 35% and 19.8%, respectively; Table 7).

We measured approximately 10,000 fish and crustaceans caught in beach seines. Fish caught in Seine A ranged in size from 16 mm (winter flounder [*Pseudopleuronectes americanus*]) to 655 mm (American eel; Table 8). Fish caught in Seine B ranged in size from 12 mm (Atlantic silverside) to 682 mm (American eel; Table 8).

2 m Fyke Net

We conducted thirty-two 12-hour sets with 2 m fyke nets in 2011 at 2 sites (Table 9). We also conducted thirty-one 24-hour sets in 2011 and 2012 at the same 2 sites (Table 10). Mean number of fish per 12-hour set (CPUE) in the upper estuary ranged from 7.7 (September 2011) to 38.8 (August 2011). CPUE in the middle estuary ranged from 11.2 (July 2011) to 48.3 (September 2011; Table 9). CPUE for 24-hour sets in the upper estuary ranged from 3.5 (October 2012) to 54.5 (September 2012). CPUE for 24-hour sets in the middle estuary ranged from 9.5 (August 2012) to 69.0 (May 2012; Table 10).

In the 2 m fyke nets we caught over 2,570 fish and crustaceans of 28 different species, including 9 species of diadromous fish (Table 11). Diadromous fish composed 67.8% and 41.3% of the overall catch in 2011 and 2012, respectively. Atlantic tomcod (*Microgadus tomcod*) was the most abundant diadromous species in 2011, while in 2012 alewife was the most abundant diadromous species. Atlantic tomcod was, overall, the most common species in 2011 (33.8%) and green crab (*Carcinus maenas*) was the most abundant species in 2012 (40.6%; Table 11).

We measured 1,861 of the fish and crustaceans caught in 2 m fyke nets. Fish size ranged from 33 mm (American shad) to 446 mm (striped bass [*Morone saxatilis*]; Table 12).

1 m Fyke Net

We conducted twenty-one 6-hour sets with 1 m fyke nets in 2011 (Table 13) and twenty 24-hour sets in 2012 (Table 14). Mean number of fish per 6-hour set (CPUE-6) in the upper estuary ranged from 1.3 (May 2011) to 321.0 (July 2011). CPUE-6 in the middle estuary ranged from 9.0 (September 2011) to 30.0 (July 2011; Table 13). Mean number of fish per 24-hour set (CPUE-24)

in the upper estuary ranged from 26.0 (July 2012) to 168.0 (October 2012). CPUE-24 in the middle estuary ranged from 4.5 (August 2012) to 137.0 (July 2012; Table 14).

We caught approximately 5,740 fish and crustaceans of 34 species in the 1 m fyke nets in 2011 and 2012 (Table 15), including 7 species of diadromous fish. Diadromous fish composed 88.3% and 34.1% of the overall catch in 2011 and 2012, respectively. Blueback herring was the most abundant diadromous species in 2011, while in 2012 Atlantic tomcod was the most abundant diadromous species. Blueback herring was also the most abundant species overall in 2011, and green crab was the most abundant species overall in 2012.

We measured 719 of the fish and crustaceans caught in 1 m fyke nets. Fish catch ranged in size from 33 mm (pumpkinseed [*Lepomis gibbosus*]) to 702 mm (American eel; Table 16).

Pelagic Trawl

We conducted 181 trawl tows of 8 transects from 2011 to 2013 (Table 17). In 2011, mean number of fish caught per tow (CPUE) in the lower estuary ranged from 5.0 (July) to 723.8 (May), and in the middle estuary, CPUE ranged from 128.0 (May) to 1,961.0 (June; Table 17). In 2012, CPUE in the lower estuary ranged from 72.3 (April) to 1,865.0 (June), and in the middle estuary, CPUE ranged from 166.3 (April) to 1,122.8 (June). In 2013, CPUE in the lower estuary ranged from 6.3 (November) to 3,147.3 (July), and in the middle estuary, CPUE ranged from 44.3 (November) to 777.1 (May).

We caught over 103,500 fish in all trawl tows combined from 2011 to 2013 (Table 18) of 22 species, including 7 species of diadromous fish. Diadromous fish composed 73.0%, 45.7%, and 55.2% of the overall catch in 2011, 2012, and 2013, respectively. Alewife was the most abundant diadromous species each year. Overall, alewife was the most abundant species in 2011, and Atlantic herring (*Clupea harengus*) was the most abundant species in 2012 and 2013.

We measured over 11,800 of the fish caught in trawl tows (Table 19). Fish ranged in size from 25 mm (rainbow smelt) to 320 mm (alewife).

Split-beam Hydroacoustics

We conducted 46 hydroacoustic surveys from 2011 to 2013. Each survey encompassed between 19.5 and 54.0 kilometers (Table 20). Echo sounder parameters can be found in Table 1. Results are synthesized in O'Malley et al. (2017).

Avian and Mammal Survey

We conducted 398 point counts of birds at 21 sites in 2011 (Table 21) and counted 1,791 birds of 47 species. The most frequently seen bird species was Double-crested Cormorants (801 observed). The largest number of birds seen at 1 time at 1 site was 101 Double-crested Cormorants, which were at the Sandy Point rookery site (44° 30' 19" N 68° 48' 19" W; Figure 11) in August 2011.

We used camera traps at a known resting site of Double-crested Cormorants in 2011 and 2012. The camera was deployed for 137 days in 2011 between 16 April and 11 October. The camera was deployed for 100 days in 2012 between 3 May and 24 August. The camera took a picture every 15 minutes. This effort resulted in 15,281 photographic images: 7,877 images in 2011 and 7,404 images in 2012.

We counted birds and mammals on approach to beach seine sites immediately before seining in 2011. We conducted these bird and mammal surveys on 60 occasions (Table 22). These data are available for analysis by request.

We conducted surveys of birds and mammals during 33 of the 46 hydroacoustic transect surveys (Table 20). We counted a total of 9,653 birds of 36 species and 1,362 mammals of 3 species. Double-crested Cormorant was the most abundant avian piscivore observed and was seen in 31 of the 33 surveys. Number of cormorants observed per survey ranged from 0 to 258. Double-crested Cormorants were most abundant in the June, July, and August surveys (Table 20 and 23). Numbers of other species are available by request.

Harbor seal (*Phoca vitulina*) was the most abundant mammal observed (Table 20), and the maximum number of harbor seals viewed during 1 survey was 97. They were most abundant in May and June. Gray seal (*Halichoerus grypus*) and harbor porpoise (*Phocoena phocoena*) were also observed (Table 20).

Cross-gear Comparisons

We compared spatial and temporal coverage of the fish capture gears by zone and month in 2012, as well as the presence and absence of 5 diadromous species (American shad, alewife, blueback herring, Atlantic salmon, and rainbow smelt) by gear. In 2012 all gears were used, but the lower estuary beach seine sites were not sampled. The lower estuary was only sampled by the trawl, and all gears except the trawl sampled the upper estuary (Table 24).

Four of the 5 diadromous species of interest were caught in every month surveyed (May through October) in 2012 (Table 25). Additionally, these 5 species were present more often in the middle estuary than in the other 2 zones. Atlantic salmon were only caught in May and were only caught with trawls and 2 m fyke nets. Beach seines were not deployed in May 2012, so there was no opportunity to catch Atlantic salmon in May with beach seines. The 5 diadromous species were detected in more months and zones by using the trawl than any of the other 3 gears.

DISCUSSION

Estuaries are inherently productive but challenging environments to study (Kramer et al. 1994). In developing methods to study estuaries, we considered the widely varying environmental conditions of the estuary in relation to the spatial scale of the survey because changes in environmental conditions can affect fish distribution (Blaber and Blaber 1980; Marshall and Elliott 1998; Martino and Able 2003). We also considered that some fish are actively migrating through the estuary, while others may be seasonal or temporary residents. Also inherent in estuarine survey design are the logistical challenges to gear deployment posed by ever-changing environmental conditions (Livingston 1987). To address the combination of these challenges, we used both active and passive gears. Once sound methodologies are established, the information gained is important because estuaries are complex habitats and relatively little is known about their community structure and function (Kramer et al. 1994).

From 2010 to 2013 we evaluated a suite of sampling strategies and gear types to develop an effective and efficient survey of fish abundance and distribution in the Penobscot estuary. We successfully deployed all gear types but found the trawl and hydroacoustics to be most useful over a large area of the estuary in a relatively short amount of time. Although these 2 methodologies are shorter in duration and require less labor, they are more expensive (equipment and contract vessels). We were able to sample 8 transects with the trawl in only 5 hours, covering over 30 km. In addition, the trawl often captured an order of magnitude more fish in one 20-minute tow than a fyke net set for 12 hours. Similarly, we used hydroacoustic equipment to sample the entire water

column (from 0.5 meters below the surface to the bottom) over a distance of 50 km and over an area of 16 km^2 in just 6 hours. Recently, O'Malley et al. (2017) described fish aggregation and distribution patterns by using acoustic fish density and acoustic size frequency distributions from these surveys. In the future, combining estimated fish biomass from acoustic surveys with validation capture data from the trawl will provide estimates of fish biomass, size structure, and species composition over time and provide the basis for long-term monitoring of fish in this system.

We captured over 60 different species of fish and invertebrates in the survey. We captured marine and freshwater species alike, and the suite of marine and diadromous species we captured were similar to those reported by Jury et al. (1994). We also captured 10 of the 12 native diadromous fish species in the Penobscot system. Atlantic and shortnose sturgeon, the 2 species not captured, were purposely avoided because of their status under the Endangered Species Act (ESA) and because sturgeon assessment activities were ongoing by other researchers (Altenritter et al. 2017a, 2017b; Wippelhauser et al. 2017).

Catches of diadromous fish varied substantially across gears. For example, in July 2012, neither the 2 m nor 1 m fyke nets caught rainbow smelt, American shad, or blueback herring. However, these species were caught by the trawl and beach seine in that same month and zone. All gears, however, regularly captured alewife. The trawl, overall, captured more species of diadromous fish more often than any of the other gears.

Catches of diadromous fish also varied over space and time. For example, we captured rainbow smelt in the middle estuary during every month of sampling, but we did not capture them in the upper estuary in either July or August, nor in the lower estuary from August to October even though substantial sampling occurred there. We captured alewife in every month and every zone except in October in the upper estuary. Atlantic salmon smolts were only captured in May. In 2011, we captured 1,036 blueback herring in 1 m fyke nets, which was almost 50% of the year's total 1 m fyke net catch. Even though sampling effort was greater in 2012, we only captured 21 blueback herring in 1 m fyke nets, or 0.6% of the total year's catch in 2012.

Five species of diadromous fish (alewife, blueback herring, American shad, rainbow smelt, and Atlantic salmon) overlapped in space and time. The overlap of these species is hypothesized to reduce predation risk on Atlantic salmon smolts, an idea referred to as a prey buffer by Saunders et al. (2006). This hypothesis is part of the rationale for a multispecies approach to Atlantic salmon recovery currently underway in Maine (US Fish and Wildlife Service and NOAA Fisheries 2016). Demonstrating overlap of these species in space and time is a requisite first step in understanding this interaction. The relatively high abundance of some of these species was somewhat surprising. For example, we caught over 18,000 river herring in 2011 prior to recent increases in reported adult returns (MDMR 2017). Further, based on size alone, many of these fish were too small to be returning adults and too large to be young-of-year. Since these estuarine habitats are generally thought to be migratory corridors for these species (Chaput 1995), the capture of these fish in this size range and at these abundances was surprising and suggests use as nursery habitat. Saunders et al. (2006) presented a table of generalized life history of anadromous fish in Maine, and we were able to add to this knowledge base by capturing anadromous fish in months during which they were not previously known to be present. We documented expanded freshwater and estuarine residence times for several species of diadromous fish, which supports the findings of Limburg (1998) and Limburg and Turner (2016), who verified "non-textbook" migration in the Hudson River, NY. Atlantic salmon smolts were only captured in May. However, our sampling may not have been sufficient to detect fall migrations in the Penobscot River if they do occur. These

alternative life history strategies (e.g., fall migrations) are considered to be important in maintaining stock productivity and diversity in other Atlantic salmon populations (Klemetsen et al. 2003). That said, there is still much to be learned about the plasticity of diadromous fish life histories.

We observed piscivorous mammals and birds throughout the survey. Harbor seals were the most abundant marine mammals in our survey, with abundance peaking from April to July. This timing coincides with harbor seal migration inshore for pupping season (Gilbert and Guldager 1998). In a recent evaluation of the incidence of seal-induced scars on Atlantic salmon in the Penobscot River, Kusnierz et al. (2014) noted a higher rate of seal-induced injuries on two-sea-winter salmon in the spring and early summer than in late summer. We also observed the greatest number of Double-crested Cormorants from April to August, which is similar to the findings of Blackwell et al. (1997). This timing coincides with the migration window for Atlantic salmon smolts (Sheehan et al. 2011) and both juvenile and adult river herring. Double-crested Cormorants are a well-known predator of these species (Blackwell et al. 1997; Hawkes et al. 2013).

Our survey results also verify the presence of several invasive invertebrate species in the Penobscot estuary including green crab and Asian shore crab (*Hemigrapsus sanguineus*). Green crab composed 40% of the 2 m fyke net catch in 2012 and over 58% of the 1 m fyke net catch in 2012 (684 and 2,149 green crabs, respectively). Green crab was by far the most abundant species captured in these gears in 2012. We also captured invasive Asian shore crabs, whose distribution only recently expanded to north of Penobscot Bay, with only 2 other known observations north of the Penobscot River (USGS 2017).

The number of suitable deployment sites was limiting for all gear types except hydroacoustics. Beach seines, for example, can only be fished in sandy and gravelly beach areas with no obstructions (Hahn et al. 2007). Two-meter fyke nets were set perpendicular to the shoreline with wings and leads attached to shore. The relatively small size of the 1 m fyke nets restricted their use to areas close to shore and with limited flow. Further, since the 1 m fyke nets were fixed gear, we could not deploy them in areas with active boat traffic, such as in the shipping channel. These limitations to deployment concentrated our sampling to the middle estuary because that zone happened to have appropriate sites for these gear types. However, the suite of gear types we used could be used to describe community structure in the estuary if deployed consistently over space and time. In particular, the trawl, 1 m fyke nets, and beach seine appear to sample different components of the fish assemblage, based on relative catch rates and species assemblage data. For example, beach seines captured primarily shallow water species such as mummichog and Atlantic silverside, and the trawl captured pelagic species (e.g., Atlantic herring and alewife). While each of these gear types would provide a biased sample if deployed in isolation, this combination would likely capture a broad cross-section of the assemblage and could provide an index of community structure if deployed consistently over space and time.

NOAA's Estuarine Living Marine Resources (ELMR) Program report (Jury et al. 1994) was the only comprehensive report that described the fish community in the Penobscot River estuary prior to our survey. Unlike our survey which reported on all captured species in the estuary, Jury et al. presented information on 54 species that were selected based on their commercial, recreational, and ecological value, and their data focused primarily on Penobscot Bay and the lower estuary, as opposed to our study which surveyed the entire estuary. Although there was only minimal overlap in study areas, 32 of the 54 species reported in the ELMR report were also present in our survey. Many of the species in the ELMR report that we did not capture are categorized as

either sessile invertebrates (5 species) or demersal fishes (14 species) and were most often found in the "seawater zone," according to Jury et al. (1994), where our sampling was limited.

The Penobscot River ecosystem is changing substantially as a result of several recent dam removals and other restoration activities (Day 2006; Trinko Lake 2012). This study was, in part, conducted to collect baseline data in light of these activities. Consistent monitoring will provide information necessary to evaluate ecologically successful river restoration (Palmer et al. 2005).

By using the methods developed from 2010 to 2013, we have continued our hydroacoustic and trawl surveys as a way to inform assessments of juvenile alosines and other key ecological attributes. If, for example, the abundance and distribution of juvenile alosines continues to increase, this would be a clear indication of ecological recovery given the historic role of river herring in providing extensive ecological services (Holmlund and Hammer 1999; Limburg and Waldman 2009; Hall et al. 2012). This information can be used to inform stakeholders of other restoration projects with respect to pace of recovery of these species.

ACKNOWLEDGEMENTS

Sampling activities were covered under the following federal and state permits:

NMFS ESA Biological Opinion F/NER/2011/00204
NMFS ESA Biological Opinion F/NER/2011/06273
Federal Fish and Wildlife Permit TE 697823-4
Maine DMR SL2010-35-04
Maine DMR SL2011-48-00
Maine DMR SL2012-24-01
Maine DMR SL2013-10-02

We would like to thank the NOAA National Marine Fisheries Service Orono Field Station staff, contractors, Hollings Scholars, and interns and for their assistance with field work, data entry, and data analysis. We also thank Richard Dill, Kevin Gallant, Peter Ruksznis, and Mitch Simpson for their assistance in the field, and David Bean for permitting assistance. We are also grateful to Tim Sheehan and John Kocik for substantial improvements to previous versions of this manuscript.

REFERENCES CITED

Altenritter ME, Zydlewski GB, Kinnison MT, Zydlewski JD, Wippelhauser GS. 2017a. Understanding the basis of shortnose sturgeon (*Acipenser brevirostrum*) partial migration in the Gulf of Maine. Canadian Journal of Fisheries and Aquatic Sciences. Advance online publication. https://doi.org/10.1139/cjfas-2017-0083

Altenritter MN, Zydlewski GB, Kinnison MT, Wippelhauser GS. 2017b. Atlantic sturgeon use of the Penobscot River and marine movements beyond the Gulf of Maine. Marine and Coastal Fisheries 9(1):216-230.

Ames EP. 2004. Atlantic cod stock structure in the Gulf of Maine. Fisheries 29(1):10-28.

Blaber SJ, Blaber TG. 1980. Factors affecting the distribution of juvenile estuarine and inshore fish. Journal of Fish Biology 17(2):143-162.

Blackwell BF, Krohn WB. 1997. Spring foraging distribution and habitat selection by double-crested cormorants on the Penobscot River, Maine USA. Colonial Waterbirds 20(1):66-76.

Blackwell BF, Krohn WB, Dube NR, Godin AJ. 1997. Spring prey use by double-crested cormorants on the Penobscot River, Maine, USA. Colonial Waterbirds 20(1):77-86.

Chaput GJ. 1995. Temporal distribution, spatial distribution, and abundance of diadromous fish in the Miramichi River watershed. Canadian Special Publication of Fisheries and Aquatic Sciences, 121-140.

Chaput G, Legault CM, Reddin DG, Caron F, Amiro PG. 2005. Provision of catch advice taking account of non-stationarity in productivity of Atlantic salmon (*Salmo salar* L.) in the Northwest Atlantic. ICES Journal of Marine Science 62(1):131-143.

Day LR. 2006. Restoring native fisheries to Maine's largest watershed: the Penobscot River Restoration Project. Journal of Contemporary Water Research & Education 134(1):29-33.

Durbin AG, Nixon SW, Oviatt CA. 1979. Effects of the spawning migration of the alewife, *Alosa pseudoharengus*, on freshwater ecosystems. Ecology 60(1):8-17.

Fernandes SJ, Zydlewski GB, Zydlewski JD, Wippelhauser GS, Kinnison MT. 2010. Seasonal distribution and movements of shortnose sturgeon and Atlantic sturgeon in the Penobscot River Estuary, Maine. Transactions of the American Fisheries Society 139(5):1436-1449.

Foster NW, Atkins CG. 1867. Report of Commission on Fisheries. In: Twelfth annual report of the Secretary of the Maine Board of Agriculture. Stevens and Sayward Printers to the State, Augusta, Maine.

Friedland KD, Manning JP, Link JS, Gilbert JR, Gilbert AT, O'Connell AF. 2012. Variation in wind and piscivorous predator fields affecting the survival of Atlantic salmon, Salmo salar, in the Gulf of Maine. Fisheries Management and Ecology 19(1):22-35.

Garman GC. 1992. Fate and potential significance of postspawning anadromous fish carcasses in an Atlantic coastal river. Transactions of the American Fisheries Society 121(3):390–394

Gilbert JR, Guldager N. 1998. Status of harbor and gray seal populations in northern New England. Final Report under NMFS/NER Cooperative Agreement, p.14-16.

Grote AB, Bailey MM, Zydlewski JD. 2014. Movements and demography of spawning American shad in the Penobscot River, Maine, prior to dam removal. Transactions of the American Fisheries Society 143(2):552-563.

Gunawardena NDP, Jutagate T, Amarasinghe US. 2016. Patterns of species composition of beach seine fisheries off North-Western coast of Sri Lanka, fishers' perspectives and implications for co-management. Marine Policy 72:131-138.

Haefner PA. 1967. Hydrography of the Penobscot River (Maine) Estuary. Journal of the Fisheries Research Board of Canada 24(7):1553–1571.

Hahn PKJ, Bailey RE, Ritchie A. 2007. Beach Seining. In: Johnson DH, Shrier BM, O'Neil JS, Knutzen JA, Augerot X, O'Neil TA, Pearsons TN, editors. Salmonid field protocols handbook: techniques for assessing status and trends in salmon and trout populations. American Fisheries Society, Bethesda, Maryland. p. 267-323.

Hall CJ, Jordaan A, Frisk MG. 2012. Centuries of anadromous forage fish loss: Consequences for ecosystem connectivity and productivity. BioScience 62(8):723-731.

Hawkes JP, Saunders RS, Vashon AD, Cooperman MS. 2013. Assessing efficacy of non-lethal harassment of double-crested cormorants to improve Atlantic salmon smolt survival. Northeastern Naturalist 20(1):1-18.

Hayes DB, Ferreri CP, Taylor WW. 1996. Active fish capture methods. In: Murphy BR, Willis DW editors. Fisheries Techniques, 2nd ed. American Fisheries Society, Bethesda, Maryland. p. 193-220.

Holmlund CM, Hammer M. 1999. Ecosystem services generated by fish populations. Ecological Economics 29(2):253-268.

Jury SH, Field JD, Stone SL, Nelson DM, Monaco ME. 1994. Distribution and abundance of fishes and invertebrates in North Atlantic estuaries. ELMR Rep. No. 13. NOAA/NOS Strategic Environmental Assessments Division, Silver Spring, MD. 221 pp.

Klemetsen A, Amundsen PA, Dempson JB, Jonsson B, Jonsson N, O'Connell MF, Mortensen E. 2003. Atlantic salmon *Salmo salar* L., brown trout *Salmo trutta* L. and Arctic charr

Salvelinus alpinus (L.): a review of aspects of their life histories. Ecology of Freshwater Fish 12(1):1–59.

Kocik JF, Hawkes JP, Sheehan TF, Music PA, Beland KF. 2009. Assessing estuarine and coastal migration and survival of wild Atlantic salmon smolts from the Naraguagus River, Maine using acoustic telemetry. In: Haro A, Smith KL, Rulifson RA, Moffitt CM, Klauda RJ, Dadswell MJ, Cunjak RA, Cooper JE, Beal KL, Avery TS, editors. Challenges for diadromous fishes in a dynamic global environment. American Fisheries Society, Symposium 69, Bethesda, Maryland. p. 293–310.

Kramer KJ, Brockmann UH, Warwick RM. 1994. Tidal estuaries: manual of sampling and analytical procedures. AA Balkema, Rotterdam, The Netherlands. 328 pp.

Kusnierz PC, Trial JG, Cox ON, Saunders R. 2014. Seal-induced injuries on adult Atlantic salmon returning to Maine. Marine and Coastal Fisheries 6(1):119-126.

Lacroix GL, Knox D. 2005. Distribution of Atlantic salmon (*Salmo salar*) postsmolts of different origins in the Bay of Fundy and Gulf of Maine and evaluation of factors affecting migration, growth, and survival. Can J Fish Aquat Sci 62(6):1363-1376.

Limburg KE. 1998. Anomalous migrations of anadromous herrings revealed with natural chemical tracers. Can J Fish Aquat Sci 55(2):431-437.

Limburg KE, Turner SM. 2016. How common is “non-textbook” migration in Hudson River Blueback Herring? Estuaries and Coasts 39:1262-1270. doi:10.1007/s12237-016-0068-2

Limburg KE, Waldman JR. 2009. Dramatic declines in North Atlantic diadromous fishes. BioScience 59(11):955–965.

Livingston RJ. 1987. Field sampling in estuaries: The relationship of scale to variability. Estuaries 10(3):194-207.

MacAvoy SE, Macko SA, McIninch SP, Garman GC. 2000. Oecologia 122(4):568-573. doi:10.1007/s004420050980

Maine Department of Marine Resources (MDMR). 2017. http://www.maine.gov/dmr/science-research/searun/programs/trapcounts.html Accessed March 20, 2017.

Maine Department of Marine Resources (MDMR), Maine Department of Inland Fisheries and Wildlife (MDIFW). 2009. Operational plan for the restoration of diadromous fishes to the Penobscot River. MDMR, Department of Inland Fisheries and Wildlife, Final Report, Augusta. Available online at maine.gov/dmr/searunfish/reports/Penobscot Operational Plan final 2009.pdf. Accessed 3 March 2017.

Marshall S, Elliott M. 1998. Environmental influences on the fish assemblage of the Humber estuary, U.K. Estuarine, Coastal and Shelf Science 46(2):175-184.

Martin EH, Apse CD. 2011. Northeast aquatic connectivity: An assessment of dams on northeastern rivers. The Nature Conservancy, Eastern Freshwater Program, Brunswick, ME.

Martino EJ, Able K. 2003. Fish assemblages across the marine to low salinity transition zone of a temperate estuary. Estuarine, Coastal, and Shelf Science 56(5):969-987.

McCormick SD, Hansen LP, Quinn TP, Saunders RL. 1998. Movement, migration, and smolting of Atlantic salmon (Salmo salar). Canadian Journal of Fisheries and Aquatic Sciences 55(1):77-92.

McDermott SP, Bransome NC, Sutton SE, Smith BE, Link JS, Miller TJ. 2015. Quantifying alosine prey in the diets of marine piscivores in the Gulf of Maine. J Fish Biol 86(6):1811–1829. doi:10.1111/jfb.12692

Metcalf & Eddy, Inc. 1994. Biological assessment for the shortnose sturgeon (*Acipenser brevirostrum*) in the lower Penobscot River. Submitted to US Environmental Protection Agency Region 1, Boston, MA. 88 pp.

National Oceanic and Atmospheric Administration (NOAA). 1998. Climatological data, annual summary, New England. NOAA, Washington, D.C., USA.

Nislow KH, Kynard BE. 2009. The role of anadromous sea lamprey in nutrient and material transport between marine and freshwater environments. In: Haro A, Smith KL, Rulifson RA, Moffitt CM, Klauda RJ, Dadswell MJ, Cunjak RA, Cooper JE, Beal KL, Avery TS, editors, Challenges for diadromous fishes in a dynamic global environment. American Fisheries Society, Symposium 69, Bethesda, Maryland. p. 485-494.

O'Malley MB, Saunders R, Stevens JR, Jech JM, Sheehan TF. 2017. Using hydroacoustics to describe pelagic fish distribution in the Penobscot Estuary, Maine. Transactions of the American Fisheries Society 146(5):817-833. doi: 10.1080/00028487.2017.1308883

O'Neal JS. 2007. Fyke Nets (in Lentic Habitats and Estuaries). In: Johnson DH, Shrier BM, O'Neil JS, Knutzen JA, Augerot X, O'Neil TA, Pearsons TN. Salmonid field protocols handbook: techniques for assessing status and trends in salmon and trout populations. American Fisheries Society, Bethesda, Maryland. p. 411-423.

Palmer MA, Bernhardt ES, Allan JD, Lake PS, Alexander G, Brooks S, Carr J, Clayton S, Dahm CN, Follstad Shah J, Galat DL, Loss SG, Goodwin P, Hart DD, Hassett B, Jenkinson R, Kondolf GM, Lave R, Meyer JL, O'Donnell TK, Pagano L, Sudduth E. 2005. Standards for ecologically successful river restoration. Journal of Applied Ecology 42(2):208–217. doi:10.1111/j.1365-2664.2005.01004.x

Penobscot Department of Natural Resources. 2001. The Penobscot Nation and the Penobscot River Basin: a watershed analysis and management pilot project. Penobscot Department of Natural Resources, Indian Island, Maine, USA.

Saunders R, Hachey MA, Fay CW. 2006. Maine's diadromous fish community. Fisheries 31(11):537–547.

Sheehan TF, Renkawitz MD, Brown RW. 2011. Surface trawl survey for U.S. origin Atlantic salmon *Salmo salar*. Journal of Fish Biology 79(2):374–398. doi:10.1111/j.1095-8649.2011.03025.x

SIMRAD. 2012. EK60 Scientific Echo Sounder System Instruction Manual. Document 164692, version D. http://www.simrad.net/ek60_ref_english/default.htm

Stich DS, Zydlewski GB, Kocik JF, Zydlewski JD. 2015 Linking behavior, physiology, and survival of Atlantic salmon smolts during estuary migration. Marine and Coastal Fisheries 7(1):68-86

Trinko Lake TR, Ravana KR, Saunders R. 2012. Evaluating changes in diadromous species distributions and habitat accessibility following the Penobscot River Restoration Project. Marine and Coastal Fisheries: Dynamics, Management, and Ecosystem Science 4(1):284–293.

United States Atlantic Salmon Assessment Committee (USASAC). 2016. Annual report of the U.S. Atlantic salmon assessment committee, Report No. 28-2015 activities. USASAC, Annual Report 2015/28, Falmouth, Maine.

US Fish and Wildlife Service and NOAA Fisheries. 2016. Draft recovery plan for the Gulf of Maine Distinct Population Segment of Atlantic salmon (Salmo salar). 61 pp.

US Geographic Survey (USGS). 2017. https://nas.er.usgs.gov/viewer/omap.aspx?SpeciesID=183# Accessed March 4, 2017.

US Office of the Federal Register (USOFR). 2009. Endangered and threatened species; determination of endangered status for the Gulf of Maine distinct population segment of Atlantic salmon, final rule. Fed Regist 117:29344–29387.

Ward DM, Hvidsten NA. 2011. Predation: Compensation and context dependence. In: Aas O, Einum S, Klemetsen A, Skurdal J, editors. Atlantic Salmon Ecology. Blackwell Publishing Limited, Oxford, UK. p. 199-220.

Willson MF, Halupka KC. 1995. Anadromous fish as keystone species in vertebrate communities. Conservation Biology 9(3):489-497.

Wippelhauser GS, Sulikowski J, Zydlewski GB, Altenritter MA, Kieffer M, Kinnison MT. 2017. Movements of Atlantic sturgeon of the Gulf of Maine inside and outside of the

geographically defined Distinct Population Segment. Marine and Coastal Fisheries 9(1):93-107.

Whoriskey FG, Brooking P, Doucette G, Tinker S, Carr JW. 2006. Movements and survival of sonically tagged farmed Atlantic salmon released in Cobscook Bay, Maine, USA. ICES Journal of Marine Science: Journal du Conseil 63(7):1218-1223.

Table 1. Echosounder parameters used for Penobscot River estuary survey.

Echosounder parameters	Setting
Split-beam frequencies	38 and 120kHz
Pulse length (ms)	0.256
Power (w)	500
Power supply (v dc)	12
Pulse rate (Hz)	4
Beam (38kHz)	Circular 12 ±2°
Beam (120kHz)	Circular 7 ±1°

Table 2. Number of point samples where data on 3 water quality parameters (temperature, salinity, dissolved oxygen) were collected during fish sampling events for the Penobscot River estuary survey, summarized by year and month by zone.

Year	Month	Lower Estuary	Middle Estuary	Upper Estuary
2010	August	4	9	10
	September	22	7	17
	October	18	9	15
	November	4	1	4
2011	April	4	3	4
	May	12	7	19
	June	14	14	16
	July	11	14	7
	August	8	6	6
	September	8	9	9
	October	7	3	5
2012	May	17	25	6
	June	4	11	8
	July	4	8	9
	August	4	14	10
	September	4	14	14
	October	-	5	10
2013	April	4	2	-
	May	16	11	-

Table 3. Number of water quality sensor deployments by year and month during hydroacoustics surveys. These deployments collected continuous surface temperature, salinity, dissolved oxygen, turbidity, and pH data along the hydroacoustic transect.

Year	Month	Deployments
2011	May	1
	June	1
2012	March	1
	April	2
	May	6
	June	2
	July	3
	August	1
	November	2
2013	April	3
	May	6
	June	2
	July	2
	August	2
	September	2
	October	1
	November	1

Table 4. Seine A (4.77 mm mesh) and Seine B (6.35 mm mesh wings and 1.59 mm mesh bag) sampling effort (number of hauls), summarized by year and month by zone.

		Seine A			Seine B	
Year	Month	Lower Estuary	Middle Estuary	Upper Estuary	Middle Estuary	Upper Estuary
2010	August	4	10	10	-	-
	September	20	7	17	-	-
	October	17	9	15	-	-
	November	4	1	4	-	-
2011	April	4	3	4	-	-
	May	8	4	7	-	-
	June	8	6	8	-	-
	July	-	-	-	6	11
	August	-	-	-	5	10
	September	8	3	5	2	5
	October	7	-	-	6	10
2012	June	-	2	3	-	-
	July	-	-	-	6	10
	August	-	-	-	6	10
	September	-	-	-	6	10
	October	-	-	-	6	10

Table 5. Mean number of fish per seine haul catch per unit effort (CPUE) caught with Seine A (4.77 mm mesh), summarized by year and month by zone.

Year	Month	Lower Estuary	Middle Estuary	Upper Estuary
2010	August	127.3	65.5	142.3
	September	181.3	44.0	85.2
	October	102.6	66.3	84.5
	November	48.8	2.0	81.5
2011	April	14.0	1.3	1.0
	May	9.5	22.8	24.9
	June	25.6	233.3	35.0
	July	62.8	-	-
	August	53.1	-	-
	September	87.0	215.3	14.8
	October	166.7	-	-
2012	June	-	97.5	54.7

Table 6. Mean number of fish per seine haul catch per unit effort (CPUE) caught with Seine B (6.35 mm mesh wings and 1.59 mm mesh bag), summarized by year and month by zone.

Year	Month	Middle Estuary	Upper Estuary
2011	July	289.5	72.7
	August	390.8	216.1
	September	201.5	77.6
	October	51.2	35.3
2012	July	216.5	52.8
	August	85.8	112.3
	September	179.8	29.9
	October	126.7	4.3

Table 7. Number of fish and crustaceans caught with Seine A (4.77 mm mesh) and Seine B (6.35 mm mesh wings and 1.59 mm mesh bag) by species and year (percent of total annual catch is in parentheses). Diadromous species are in bold.

		Seine A			Seine B	
Scientific Name	Species	2010	2011	2012	2011	2012
Alosa aestivalis	**Blueback herring**	**85 (0.5)**	**1,185 (14.1)**	**5 (1.4)**	**122 (1.4)**	**1,056 (15.7)**
Alosa pseudoharengus	**Alewife**	**266 (1.6)**	**155 (1.8)**	**4 (1.1)**	**257 (2.9)**	**377 (5.6)**
Alosa sapidissima	**American shad**	**73 (0.4)**	**9 (0.1)**	**0**	**61 (0.7)**	**143 (2.1)**
Americamysis bahia	Mysid (shrimp)	413 (2.4)	123 (1.5)	0	100 (1.1)	11 (0.2)
Ammodytes dubius	Sand lance	15 (0.1)	30 (0.4)	0	0	0
Anguilla rostrata	**American eel**	**20 (0.1)**	**4 (0)**	**3 (0.8)**	**389 (4.3)**	**383 (5.7)**
Apeltes quadracus	Fourspine stickleback	6 (0)	3 (0)	0	8 (0.1)	0
Cancer irroratus	Atlantic rock crab	0	3 (0)	0	0	0
Carcinus maenas	Green crab	0	793 (9.4)	0	79 (0.9)	147 (2.2)
Catostomus commersonii	White sucker	22 (0.1)	11 (0.1)	1 (0.3)	8 (0.1)	18 (0.3)
Chrosomus neogaeus	Finescale dace	0	0	9 (2.5)	0	0
Clupea harengus	Atlantic herring	0	7 (0.1)	9 (2.5)	0	1 (0)
Clupeidae FAMILY	Shad-Herring species	2 (0)	0	0	1,091 (12.1)	394 (5.9)
Cottus cognatus	Slimy sculpin	0	0	0	0	1 (0)
Crangon septemspinosa	Sand shrimp	4,156 (24.6)	1,685 (20)	0	707 (7.9)	900 (13.4)
Crustacea CLASS	Crab species	233 (1.4)	0	0	0	0
Crustacea CLASS	Crayfish	1 (0)	1 (0)	1 (0.3)	0	0
Cyprinidae FAMILY	Minnow species	2 (0)	0	8 (2.2)	4 (0)	4 (0.1)
Esox niger	Chain pickerel	0	0	0	0	1 (0)
Fundulus diaphanus	Banded killifish	186 (1.1)	11 (0.1)	1 (0.3)	271 (3)	17 (0.3)
Fundulus heteroclitus	Mummichog	4,850 (28.7)	984 (11.7)	59 (16.4)	3,145 (35)	1,330 (19.8)
Gammarus	Gammarus species	1 (0)	2 (0)	0	0	0
Gasterosteidae FAMILY	Stickleback species	0	0	0	1 (0)	0
Gasterosteus aculeatus	Threespine	47 (0.3)	33 (0.4)	0	10 (0.1)	3 (0)
Hemigrapsus sanguineus	Asian shore crab	0	0	0	0	3 (0)
Lepomis auritus	Redbreast sunfish	0	5 (0.1)	0	9 (0.1)	4 (0.1)
Lepomis gibbosus	Pumpkinseed	9 (0.1)	1 (0)	2 (0.6)	11 (0.1)	4 (0.1)

Lepomis SPP.	Sunfish species	0	3 (0)	0	0	0
Limanda ferruginea	Yellowtail flounder	5 (0)	0	0	0	0
Luxilus cornutus	Common shiner	12 (0.1)	18 (0.2)	10 (2.8)	4 (0)	6 (0.1)
Menidia menidia	Atlantic silverside	5,806 (34.3)	1,705 (20.3)	24 (6.7)	2,042 (22.7)	854 (12.7)
Microgadus tomcod	**Atlantic tomcod**	**16 (0.1)**	**839 (10)**	**83 (23.1)**	**78 (0.9)**	**6 (0.1)**
Micropterus dolomieu	Smallmouth bass	2 (0)	2 (0)	0	10 (0.1)	10 (0.1)
Micropterus salmoides	Largemouth bass	6 (0)	0	0	2 (0)	1 (0)
Morone americana	White perch	34 (0.2)	1 (0)	1 (0.3)	178 (2)	76 (1.1)
Myoxocephalus aenaeus	Grubby	6 (0)	49 (0.6)	0	0	0
Notemigonus crysoleucas	Golden shiner	2 (0)	157 (1.9)	46 (12.8)	21 (0.2)	159 (2.4)
Notropis hudsonius	Spottail shiner	1 (0)	4 (0)	0	78 (0.9)	107 (1.6)
Osmerus mordax	**Rainbow smelt**	**289 (1.7)**	**380 (4.5)**	**91 (25.3)**	**132 (1.5)**	**479 (7.1)**
Pandalus borealis	Northern shrimp	1 (0)	0	0	0	0
Perca flavescens	Yellow perch	0	23 (0.3)	0	3 (0)	0
Pholis gunnellus	Rock gunnel	1 (0)	0	0	0	0
Pimephales promelas	Fathead minnow	0	0	0	2 (0)	1 (0)
Pleuronectes putnami	Smooth flounder	0	29 (0.3)	0	9 (0.1)	5 (0.1)
Pollachius virens	Pollock	0	1 (0)	0	0	0
Pomatomus saltatrix	Bluefish	189 (1.1)	4 (0)	0	7 (0.1)	138 (2.1)
Pomoxis nigromaculatus	Black crappie	0	5 (0.1)	0	0	0
Pseudopleuronectes americanus	Winter flounder	82 (0.5)	61 (0.7)	1 (0.3)	42 (0.5)	30 (0.4)
Pungitius pungitius	Ninespine stickleback	7 (0)	3 (0)	0	7 (0.1)	2 (0)
Rhinichthys atratulus	Blacknose dace	1 (0)	7 (0.1)	0	0	1 (0)
Salmo salar	**Atlantic salmon**	**0**	**2 (0)**	**0**	0	0
Scophthalmus aquosus	Windowpane	9 (0.1)	2 (0)	0	1 (0)	0
Semotilus atromaculatus	Creek chub	2 (0)	2 (0)	0	0	0
Semotilus corporalis	Fallfish	30 (0.2)	41 (0.5)	2 (0.6)	69 (0.8)	10 (0.1)
Asteroidea CLASS	Starfish	1 (0)	0	0	0	0
Syngnathus fuscus	Northern pipefish	14 (0.1)	18 (0.2)	0	24 (0.3)	25 (0.4)
Teleostei INFRACLASS	Unidentified Fish	0	6 (0.1)	0	7 (0.1)	0
Trachurus lathami	Rough scad	1 (0)	0	0	0	0

Table 8. Number of fish and crustaceans measured during surveys using Seine A (4.77 mm mesh) and Seine B (6.35 mm mesh wings and 1.59 mm mesh bag) by species and year. Minimum and maximum total lengths (mm) are in parentheses. Atlantic salmon were measured by using fork length, and crabs were measured by using carapace width. Diadromous species are in bold.

		Seine A			Seine B	
Scientific Name	Species	2010	2011	2012	2011	2012
Alosa aestivalis	**Blueback herring**	**73 (45-134)**	**81 (36-100)**	**5 (75-90)**	**37 (29-48)**	**182 (29-108)**
Alosa pseudoharengus	**Alewife**	**151 (34-123)**	**129 (36-120)**	**4 (76-96)**	**184 (25-98)**	**254 (32-100)**
Alosa sapidissima	**American shad**	**73 (32-124)**	**9 (50-136)**	**0**	**60 (19-99)**	**143 (18-109)**
Ammodytes dubius	Sand lance	15 (104-149)	30 (94-120)	0	0	0
Anguilla rostrata	**American eel**	**19 (105-655)**	**3 (51-430)**	**2 (50-165)**	**228 (45-254)**	**88 (45-682)**
Apeltes quadracus	Fourspine stickleback	6 (41-47)	3 (38-56)	0	8 (20-56)	0
Cancer irroratus	Atlantic rock crab	0	3 (52-114)	0	0	0
Carcinus maenas	Green crab	0	575 (5-115)	0	71 (10-48)	123 (10-70)
Catostomus commersonii	White sucker	9 (57-347)	11 (60-169)	1 (327-327)	7 (76-363)	18 (188-367)
Chrosomus neogaeus	Finescale dace	0	0	9 (35-70)	0	0
Clupea harengus	Atlantic herring	0	7 (46-124)	9 (60-76)	0	1 (125-125)
Clupeidae FAMILY	Shad-Herring species	2 (22-43)	0	0	30 (23-30)	48 (17-37)
Cottus cognatus	Slimy sculpin	0	0	0	0	1 (90-90)
Cyprinidae FAMILY	Minnow species	2 (26-40)	0	8 (35-57)	1 (25-25)	4 (35-50)
Esox niger	Chain pickerel	0	0	0	0	1 (425-425)
Fundulus diaphanus	Banded killifish	76 (41-78)	11 (42-73)	1 (60-60)	55 (22-97)	17 (41-90)
Fundulus heteroclitus	Mummichog	880 (22-110)	307 (22-105)	48 (38-98)	525 (15-101)	355 (27-101)
Gasterosteus aculeatus	Threespine	46 (35-60)	33 (21-70)	0	10 (16-59)	3 (40-50)
Hemigrapsus sanguineus	Asian shore crab	0	0	0	0	2 (20-24)
Lepomis auritus	Redbreast sunfish	0	5 (42-52)	0	9 (39-160)	4 (155-190)
Lepomis gibbosus	Pumpkinseed	9 (36-47)	1 (44-44)	2 (57-60)	11 (27-110)	4 (33-132)
Lepomis SPP.	Sunfish species	0	3 (46-54)	0	0	0
Limanda ferruginea	Yellowtail flounder	5 (54-75)	0	0	0	0
Luxilus cornutus	Common shiner	12 (32-105)	18 (41-70)	10 (44-62)	4 (54-92)	6 (46-74)
Menidia menidia	Atlantic silverside	1151 (31-138)	489 (25-132)	23 (71-113)	353 (17-118)	275 (12-120)
Microgadus tomcod	**Atlantic tomcod**	**16 (115-193)**	**404 (18-111)**	**61 (26-59)**	**63 (29-82)**	**6 (41-80)**
Micropterus dolomieu	Smallmouth bass	2 (41-95)	2 (51-56)	0	10 (30-278)	10 (20-295)

Micropterus salmoides	Largemouth bass	6 (66-102)	0	0	2 (93-100)	1 (35-35)
Morone americana	White perch	34 (70-288)	1 (80-80)	1 (90-90)	81 (20-290)	44 (35-172)
Myoxocephalus aenaeus	Grubby	6 (55-77)	34 (20-112)	0	0	0
Notemigonus crysoleucas	Golden shiner	2 (67-87)	107 (39-72)	41 (44-95)	21 (22-83)	79 (38-118)
Notropis hudsonius	Spottail shiner	1 (50-50)	4 (43-55)	0	53 (36-79)	107 (20-110)
Osmerus mordax	**Rainbow smelt**	**232 (40-92)**	**215 (30-175)**	**60 (55-90)**	**121 (18-48)**	**92 (19-72)**
Perca flavescens	Yellow perch	0	23 (55-112)	0	3 (107-128)	0
Pholis gunnellus	Rock gunnel	1 (135-135)	0	0	0	0
Pimephales promelas	Fathead minnow	0	0	0	2 (25-27)	1 (58-58)
Pleuronectes putnami	Smooth flounder	0	27 (42-105)	0	9 (51-100)	4 (60-124)
Pollachius virens	Pollock	0	1 (30-30)	0	0	0
Pomatomus saltatrix	Bluefish	113 (65-156)	4 (61-75)	0	7 (48-70)	120 (51-185)
Pomoxis nigromaculatus	Black crappie	0	5 (80-96)	0	0	0
Pseudopleuronectes americanus	Winter flounder	82 (39-153)	61 (16-329)	1 (130-130)	42 (35-137)	30 (20-139)
Pungitius pungitius	Ninespine stickleback	7 (53-62)	3 (43-48)	0	7 (26-38)	2 (35-44)
Rhinichthys atratulus	Blacknose dace	1 (46-46)	7 (37-51)	0	0	1 (44-44)
Salmo salar	**Atlantic salmon**	**0**	**2 (150-198)**	**0**	0	0
Scophthalmus aquosus	Windowpane	9 (32-63)	2 (25-78)	0	1 (97-97)	0
Semotilus atromaculatus	Creek chub	2 (57-95)	2 (56-63)	0	38 (22-105)	10 (42-213)
Semotilus corporalis	Fallfish	29 (36-82)	41 (55-155)	2 (58-67)	0	0
Syngnathus fuscus	Northern pipefish	13 (103-198)	17 (25-240)	0	24 (53-250)	25 (56-237)
Teleostei INFRACLASS	Unidentified Fish	0	6 (86-161)	0	4 (21-25)	0
Trachurus lathami	Rough scad	1 (85-85)	0	0	0	0

Table 9. Number of 12-hour sets and mean number of fish caught per 12-hr set catch per unit effort (CPUE) with 2m fyke nets, summarized by year and month by zone.

		Effort		CPUE	
Year	Month	Middle Estuary	Upper Estuary	Middle Estuary	Upper Estuary
2011	May	-	6	-	18.7
	June	-	6	-	17.7
	July	6	-	11.2	-
	August	4	4	46.0	38.8
	September	3	3	48.3	7.7

Table 10. Number of 24-hour sets and mean number of fish caught per 24-hr set catch per unit effort (CPUE) with 2m fyke nets, summarized by year and month by zone.

		Effort		CPUE	
Year	Month	Middle Estuary	Upper Estuary	Middle Estuary	Upper Estuary
2011	May	-	1	-	24.0
2012	May	5	5	69.0	25.6
	June	3	3	46.7	9.3
	July	1	1	14.0	30.0
	August	2	2	9.5	11.0
	September	2	2	23.5	54.5
	October	2	2	52.0	3.5

Table 11. Number of fish and crustaceans caught in 2m fyke nets by species and year (percent of total annual catch is in parentheses). Diadromous species are in bold.

Scientific Name	Species	2011	2012
Alosa aestivalis	**Blueback herring**	**65 (7.3)**	**13 (0.8)**
Alosa pseudoharengus	**Alewife**	**111 (12.4)**	**311 (18.5)**
Alosa sapidissima	**American shad**	**2 (0.2)**	**2 (0.1)**
Ameiurus nebulosus	Brown bullhead	6 (0.7)	3 (0.2)
Anguilla rostrata	**American eel**	**23 (2.6)**	**15 (0.9)**
Carcinus maenas	Green crab	70 (7.8)	684 (40.6)
Catostomus commersonii	White sucker	61 (6.8)	42 (2.5)
Crangon septemspinosa	Sand shrimp	7 (0.8)	8 (0.5)
Luxilus cornutus	Common shiner	6 (0.7)	0
Menidia menidia	Atlantic silverside	17 (1.9)	9 (0.5)
Microgadus tomcod	**Atlantic tomcod**	**302 (33.8)**	**270 (16)**
Micropterus dolomieu	Smallmouth bass	0	2 (0.1)
Micropterus salmoides	Largemouth bass	0	1 (0.1)
Morone americana	White perch	67 (7.5)	142 (8.4)
Morone saxatilis	**Striped bass**	**0**	**1 (0.1)**
Myoxocephalus aenaeus	Grubby	1 (0.1)	2 (0.1)
Notemigonus crysoleucas	Golden shiner	1 (0.1)	2 (0.1)
Osmerus mordax	**Rainbow smelt**	**28 (3.1)**	**58 (3.4)**
Peprilus triacanthus	Butterfish	0	13 (0.8)
Pleuronectes putnami	Smooth flounder	8 (0.9)	5 (0.3)
Pomatomus saltatrix	Bluefish	0	4 (0.2)
Pomoxis nigromaculatus	Black crappie	6 (0.7)	1 (0.1)
Pseudopleuronectes americanus	Winter flounder	31 (3.5)	66 (3.9)
Salmo salar	**Atlantic salmon**	**75 (8.4)**	**23 (1.4)**
Salvelinus fontinalis	**Brook trout**	**0**	**3 (0.2)**
Scomber scombrus	Atlantic mackerel	0	2 (0.1)
Scophthalmus aquosus	Windowpane flounder	4 (0.4)	2 (0.1)
Urophycis chuss	Red hake	2 (0.2)	1 (0.1)

Table 12. Number of fish and crustaceans measured during 2m fyke net surveys by species and year. Minimum and maximum total lengths (mm) are in parentheses. Atlantic salmon were meausured using fork length, and crabs were measured using carapace width. Diadromous species are in bold.

Scientific Name	Species	2011	2012
Alosa aestivalis	**Blueback herring**	**32 (51-118)**	**12 (227-267)**
Alosa pseudoharengus	**Alewife**	**111 (37-318)**	**276 (47-315)**
Alosa sapidissima	**American shad**	**2 (33-185)**	**2 (159-176)**
Ameiurus nebulosus	Brown bullhead	6 (154-398)	2 (155-235)
Anguilla rostrata	**American eel**	**23 (420-790)**	**15 (190.2-720)**
Carcinus maenas	Green crab	70 (10-184)	300 (25-87)
Catostomus commersonii	White sucker	61 (170-400)	42 (171-399)
Luxilus cornutus	Common shiner	6 (53-74)	0
Menidia menidia	Atlantic silverside	17 (92-115)	1 (105-105)
Microgadus tomcod	**Atlantic tomcod**	**168 (62-252)**	**203 (136-300)**
Micropterus dolomieu	Smallmouth bass	0	2 (219-380)
Micropterus salmoides	Largemouth bass	0	1 (280-280)
Morone americana	White perch	67 (130-329)	107 (109-331)
Morone saxatilis	**Striped bass**	**0**	**1 (446-446)**
Myoxocephalus aenaeus	Grubby	1 (114-114)	2 (105-110)
Notemigonus crysoleucas	Golden shiner	1 (118-118)	2 (45-48)
Osmerus mordax	**Rainbow smelt**	**28 (75-235)**	**55 (141-265)**
Peprilus triacanthus	Butterfish	0	13 (129-220)
Pleuronectes putnami	Smooth flounder	7 (84-98)	5 (99-156)
Pomatomus saltatrix	Bluefish	0	4 (74-176)
Pomoxis nigromaculatus	Black crappie	6 (84-129)	1 (107-107)
Pseudopleuronectes americanus	Winter flounder	31 (93-150)	66 (78-230)
Salmo salar	**Atlantic salmon**	**75 (142-222)**	**23 (172-227)**
Salvelinus fontinalis	**Brook trout**	**0**	**3 (155-225)**
Scomber scombrus	Atlantic mackerel	0	2 (245-274)
Scophthalmus aquosus	Windowpane	4 (82-143)	2 (76-133)
Urophycis chuss	Red hake	2 (231-236)	1 (153-153)

Table 13. Number of 6-hour sets and mean number of fish caught per 6-hr set catch per unit effort (CPUE) with 1 m fyke nets, summarized by year and month by zone.

		Effort		CPUE	
Year	Month	Middle Estuary	Upper Estuary	Middle Estuary	Upper Estuary
2011	May		8	-	1.3
	June	1	4	28.0	302.5
	July	1	1	30.0	321.0
	August	2	2	25.0	113.0
	September	1	1	9.0	33.0

Table 14. Number of 24-hour sets and mean number of fish caught per 24-hr set catch per unit effort (CPUE) with 1m fyke nets, summarized by year and month by zone.

		Effort		CPUE	
Year	Month	Middle Estuary	Upper Estuary	Middle Estuary	Upper Estuary
2012	May	1	1	27.0	84.0
	June	2	2	21.0	51.5
	July	1	1	137.0	26.0
	August	2	2	4.5	35.0
	September	2	2	66.5	94.0
	October	2	2	108.5	168.0

Table 15. Number of fish and crustaceans caught in 1m fyke nets by species and year (percent of total annual catch is in parentheses). Diadromous species are in bold.

Scientific Name	Species	2011	2012
Alosa aestivalis	**Blueback herring**	**1,036 (49.5)**	**21 (0.6)**
Alosa pseudoharengus	**Alewife**	**718 (34.3)**	**106 (2.9)**
Alosa sapidissima	**American shad**	**0**	**7 (0.2)**
Ameiurus nebulosus	Brown bullhead	0	4 (0.1)
Americamysis bahia	Mysid (shrimp)	0	27 (0.7)
Anguilla rostrata	**American eel**	**0**	**127 (3.5)**
Apeltes quadracus	Fourspine stickleback	18 (0.9)	23 (0.6)
Carcinus maenas	Green crab	32 (1.5)	2149 (58.9)
Catostomus commersonii	White sucker	2 (0.1)	9 (0.2)
Chrosomus neogaeus	Finescale dace	0	2 (0.1)
Crangon septemspinosa	Sand shrimp	131 (6.3)	58 (1.6)
Crustacea CLASS	Crab species	14 (0.7)	0
Fundulus heteroclitus	Mummichog	5 (0.2)	0
Gasterosteus aculeatus	Threespine stickleback	7 (0.3)	3 (0.1)
Hemigrapsus sanguineus	Asian shore crab	0	45 (1.2)
Lepomis auritus	Redbreast sunfish	2 (0.1)	0
Lepomis gibbosus	Pumpkinseed	0	6 (0.2)
Luxilus cornutus	Common shiner	0	2 (0.1)
Margariscus margarita	Pearl dace	1	1 (0)
Menidia menidia	Atlantic silverside	19 (0.9)	0
Microgadus tomcod	**Atlantic tomcod**	**78 (3.7)**	**973 (26.7)**
Micropterus salmoides	Largemouth bass	0	1 (0)
Morone americana	White perch	0	26 (0.7)
Myoxocephalus aenaeus	Grubby	0	2 (0.1)
Osmerus mordax	**Rainbow smelt**	**17 (0.8)**	**6 (0.2)**
Perca flavescens	Yellow perch	5 (0.2)	0
Petromyzon marinus	**Sea lamprey**	**(0)**	**1 (0)**
Pleuronectes putnami	Smooth flounder	1 (0)	7 (0.2)
Pomatomus saltatrix	Bluefish	0	14 (0.4)
Pomoxis nigromaculatus	Black crappie	1 (0)	0
Pseudopleuronectes americanus	Winter flounder	2 (0.1)	25 (0.7)
Pungitius pungitius	Ninespine stickleback	2 (0.1)	1 (0)
Selene vomer	Lookdown	0	1 (0)
Syngnathus fuscus	Northern pipefish	2 (0.1)	4 (0.1)
Urophycis chuss	Red hake	0	1 (0)

Table 16. Number of fish and crustaceans measured during 1m fyke net surveys by species and year. Minimum and maximum total lengths (mm) are in parentheses. Carapace width was measured for crabs. Diadromous species are in bold.

Scientific Name	Species	2011	2012
Alosa aestivalis	**Blueback herring**	**38 (39-112)**	**15 (40-86)**
Alosa pseudoharengus	**Alewife**	**66 (40-126)**	**54 (39-315)**
Alosa sapidissima	**American shad**	**0**	**7 (77-122)**
Ameiurus nebulosus	Brown bullhead	0	4 (114-332)
Anguilla rostrata	**American eel**	**0**	**82 (135-702)**
Apeltes quadracus	Fourspine stickleback	12 (39-56)	12 (44-59)
Carcinus maenas	Green crab	23 (20-111)	43 (13-81)
Catostomus commersonii	White sucker	2 (133-328)	9 (83-360)
Chrosomus neogaeus	Finescale dace	0	2 (50-58)
Crustacea CLASS	Crab species	6 (13-22)	0
Fundulus heteroclitus	Mummichog	5 (50-91)	0
Gasterosteus aculeatus	Threespine stickleback	6 (44-64)	3 (35-61)
Hemigrapsus sanguineus	Asian shore crab	0	12 (8-22)
Lepomis auritus	Redbreast sunfish	2 (56-102)	0
Lepomis gibbosus	Pumpkinseed	0	5 (33-104)
Luxilus cornutus	Common shiner	0	2 (55-66)
Margariscus margarita	Pearl dace	1 (93-93)	0
Menidia menidia	Atlantic silverside	16 (51-115)	0
Microgadus tomcod	**Atlantic tomcod**	**56 (50-217)**	**134 (35-248)**
Micropterus salmoides	Largemouth bass	0	1 (68-68)
Morone americana	White perch	0	20 (66-181)
Myoxocephalus aenaeus	Grubby	0	2 (104-112)
Osmerus mordax	**Rainbow smelt**	**16 (56-190)**	**5 (52-215)**
Perca flavescens	Yellow perch	5 (77-93)	0
Petromyzon marinus	**Sea lamprey**	**0**	**1 (660-660)**
Pleuronectes putnami	Smooth flounder	1 (60-60)	7 (105-180)
Pomatomus saltatrix	Bluefish	0	12 (54-91)
Pomoxis nigromaculatus	Black crappie	1 (88-88)	0
Pseudopleuronectes americanus	Winter flounder	1 (120-120)	18 (72-215)
Pungitius pungitius	Ninespine stickleback	2 (55-65)	1 (40-40)
Selene vomer	Lookdown	0	1 (52-52)
Syngnathus fuscus	Northern pipefish	2 (83-111)	4 (175-193)
Urophycis chuss	Red hake	0	1 (146-146)

Table 17. Number of trawl tows and mean number of fish caught per tow catch per unit effort (CPUE) in trawl nets, summarized by year and month zone.

		Effort		CPUE	
Year	Month	Lower Estuary	Middle Estuary	Lower Estuary	Middle Estuary
2011	May	4	3	723.8	128.0
	June	6	7	448.5	1,961.0
	July	3	4	5.0	423.5
2012	April	3	3	72.3	166.3
	May	18	19	440.1	409.5
	June	4	4	1,865.0	1,122.8
	July	4	4	149.5	752.8
	August	4	4	413.3	843.8
	September	4	4	446.5	934.0
2013	April	4	2	268.5	66.0
	May	20	15	293.9	777.1
	June	4	3	434.5	561.3
	July	3	3	3,147.3	413.7
	August	3	3	24.3	52.3
	September	3	3	33.3	105.0
	October	4	3	1,505.5	71.0
	November	4	3	6.3	44.3

Table 18. Number of fish and crustaceans caught in trawl nets by species and year (percent of total annual catch is in parentheses). Diadromous species are in bold.

Scientific Name	Species	2011	2012	2013
Alosa aestivalis	**Blueback herring**	**5,287 (24.7)**	**6,081 (14.3)**	**7,680 (19.3)**
Alosa pseudoharengus	**Alewife**	**9,826 (45.9)**	**11,715 (27.5)**	**12,582 (31.7)**
Alosa sapidissima	**American shad**	**469 (2.2)**	**121 (0.3)**	**286 (0.7)**
Cancer irroratus	Atlantic rock crab	2 (0)	0	50 (0.1)
Carcinus maenas	Green crab	3 (0)	5 (0)	0
Clupea harengus	Atlantic herring	5,752 (26.9)	22,809 (53.6)	17,582 (44.3)
Cyclopterus lumpus	Lumpfish	2 (0)	0	0
Gasterosteus aculeatus	Threespine stickleback	1 (0)	1 (0)	0
Doryteuthis pealeii	Longfin inshore squid	0	3 (0)	0
Luxilus cornutus	Common shiner	0	1 (0)	0
Menidia menidia	Atlantic silverside	0	4 (0)	0
Microgadus tomcod	**Atlantic tomcod**	**0**	**58 (0.1)**	**30 (0.1)**
Myoxocephalus aenaeus	Grubby	0	0	2 (0)
Osmerus mordax	**Rainbow smelt**	**38 (0.2)**	**1,398 (3.3)**	**1,259 (3.2)**
Peprilus triacanthus	Butterfish	4 (0)	56 (0.1)	29 (0.1)
Petromyzon marinus	**Sea lamprey**	**0**	**1 (0)**	**3 (0)**
Pomatomus saltatrix	Bluefish	0	120 (0.3)	86 (0.2)
Pseudopleuronectes americanus	Winter flounder	4 (0)	4 (0)	15 (0)
Salmo salar	**Atlantic salmon**	**0**	**102 (0.2)**	**97 (0.2)**
Scomber scombrus	Atlantic mackerel	21 (0.1)	44 (0.1)	1 (0)
Scophthalmus aquosus	Windowpane	0	5 (0)	1 (0)
Syngnathus fuscus	Northern pipefish	2 (0)	4 (0)	3 (0)

Table 19. Number of fish and crustaceans measured during trawl surveys by species and year. Minimum and maximum total lengths (mm) are in parentheses. Atlantic salmon were meausured using fork length, and crabs were measured using carapace width. Diadromous species are in bold.

Scientific Name	Species	2011	2012	2013
Alosa aestivalis	**Blueback herring**	**674 (58-248)**	**1,104 (57-270)**	**935 (45-240)**
Alosa pseudoharengus	**Alewife**	**637 (74-301)**	**1,374 (51-300)**	**1,582 (50-320)**
Alosa sapidissima	**American shad**	**221 (130-265)**	**121 (92-223)**	**284 (70-270)**
Cancer irroratus	Atlantic rock crab	0	0	0
Carcinus maenas	Green crab	0	5 (35-85)	0
Clupea harengus	Atlantic herring	360 (40-189)	1,602 (55-190)	1,177 (35-204)
Cyclopterus lumpus	Lumpfish	2 (98-102)	0	0
Gasterosteus aculeatus	Threespine stickleback	1 (58-58)	1 (61-61)	0
Doryteuthis pealeii	Longfin inshore squid	0	3 (255-305)	0
Luxilus cornutus	Common shiner	0	1 (77-77)	0
Menidia menidia	Atlantic silverside	0	4 (72-93)	0
Microgadus tomcod	**Atlantic tomcod**	**0**	**58 (62-220)**	**30 (88-262)**
Myoxocephalus aenaeus	Grubby	0		2 (106-120)
Osmerus mordax	**Rainbow smelt**	**38 (68-202)**	**669 (25-256)**	**574 (36-233)**
Peprilus triacanthus	Butterfish	4 (105-130)	56 (86-182)	29 (105-178)
Petromyzon marinus	**Sea lamprey**	**0**	**1 (195-195)**	**0**
Pomatomus saltatrix	Bluefish	0	119 (65-194)	86 (73-186)
Pseudopleuronectes americanus	Winter flounder	4 (68-84)	4 (94-105)	15 (65-198)
Salmo salar	**Atlantic salmon**	**0**	**102 (141-228)**	**97 (134-217)**
Scomber scombrus	Atlantic mackerel	21 (225-270)	44 (218-317)	1 (262-262)
Scophthalmus aquosus	Windowpane	0	5 (88-115)	1 (119-119)
Syngnathus fuscus	Northern pipefish	2 (215-222)	4 (195-221)	2 (211-217)

Table 20. Distance of hydroacoustic surveys (in km) by date. Number of Double-crested Cormorants (*Phalacrocorax auritus*) and marine mammals (gray seal [*Halichoerus grypus*]; harbor seal [*Phoca vitulina*]; harbor porpoise [*Phocoena phocoena*]) seen per survey. ** indicates that an avian and marine mammal survey was not conducted.

			Number of Individuals Sighted			
Year	Date	Survey Distance (km)	Double-crested Cormorants	Gray Seal	Harbor Porpoise	Harbor Seal
2011	5-May	34	-	-	-	-
	13-May	37.5	147	0	0	17
	7-Jun	33	33	0	0	1
	21-Jun	40	124	0	3	12
	2-Nov	33.5	-	-	-	-
	8-Nov	19.5	4	1	0	36
	14-Nov	32	-	-	-	-
	5-Dec	39	-	-	-	-
2012	21-Mar	33.5	0	0	0	1
	28-Mar	40	0	0	0	22
	11-Apr	38.5	66	0	0	86
	20-Apr	40	-	-	-	-
	26-Apr	40.5	-	-	-	-
	2-May	39	149	0	0	34
	3-May	40.5	-	-	-	-
	4-May	39	-	-	-	-
	5-May	39	132	0	0	24
	7-May	40	136	0	0	24
	10-May	37	136	0	0	19
	1-Jun	46.5	138	0	0	76
	19-Jun	49	205	0	0	35
	5-Jul	54	-	-	-	-
	13-Jul	33.5	-	-	-	-
	25-Jul	48	240	0	0	66
	15-Aug	51	258	1	6	24
	5-Nov	49	-	-	-	-
	20-Nov	52	-	-	-	-
2013	5-Apr	35	-	-	-	-
	15-Apr	54	71	0	0	80
	26-Apr	51.5	128	0	9	37
	1-May	52.5	111	0	1	74
	2-May	50	114	0	0	93
	7-May	36	67	0	0	50
	15-May	49.5	121	0	0	87
	21-May	49.5	110	0	3	97

28-May	48.5	112	0	0	30
13-Jun	52	162	0	0	88
25-Jun	51	189	0	0	49
10-Jul	51.5	174	0	1	58
25-Jul	50.5	181	0	1	29
7-Aug	51.5	199	0	0	27
29-Aug	51	101	1	0	13
11-Sep	51.5	62	0	0	26
25-Sep	50.5	68	0	0	5
25-Oct	51	47	0	0	13
5-Nov	51	8	0	0	2

Table 21. Number of point count sites surveyed for birds by month and year.

Year	Month	Number of Sites Surveyed
2011	April	73
	May	127
	June	89
	July	43
	August	37
	September	29

Table 22. Number of bird and mammal surveys conducted on approach to beach seine sites.

Year	Month	Lower Estuary	Middle Estuary	Upper Estuary
2011	April	4	3	4
	May	8	4	7
	June	8	6	8
	July	-	6	11
	August	-	5	10
	September	8	5	10
	October	7	6	10

Table 23. Mean number of Double-crested Cormorants (*Phalacrocorax auritus*) seen during hydroacoustic transect surveys summarized by year and month.

Year	Month	Number of Surveys	Mean # Sighted
2011	May	1	147
	June	2	78.5
	November	1	4
2012	March	2	0
	April	1	66
	May	4	138.3
	June	2	171.5
	July	1	240
	August	1	258
2013	April	2	99.5
	May	6	105.8
	June	2	175.5
	July	2	177.5
	August	2	150
	September	2	65
	October	1	47
	November	1	8

Table 24. Presence and absence of 5 diadromous species, Alewife (*Alosa pseudoharengus*), Blueback herring (*Alosa aestivalis*), American shad (*Alosa sapidissima*), Rainbow smelt (*Osmerus mordax*), Atlantic salmon (*Salmo salar*), captured in fish survey gear by gear and by month and zone in 2012. U = upper estuary, M = middle estuary, L = lower estuary. Green indicates the species was caught, red indicates absence of the species in the catch, and gray indicates no fishing effort.

	May			June			July			August			September			October		
Seine	**U**	**M**	**L**	**U**	**M**	**L**	**U**	**M**	**L**	**U**	**M**	**L**	**U**	**M**	**L**	**U**	**M**	**L**
Alewife																		
Blueback herring																		
American shad																		
Rainbow smelt																		
Atlantic salmon																		
2m fyke																		
Alewife																		
Blueback herring																		
American shad																		
Rainbow smelt																		
Atlantic salmon																		
1m fyke																		
Alewife																		
Blueback herring																		
American shad																		
Rainbow smelt																		
Atlantic salmon																		
Trawl																		
Alewife																		
Blueback herring																		
American shad																		
Rainbow smelt																		
Atlantic salmon																		

Table 25. Presence and absence of 5 diadromous species, Alewife (*Alosa pseudoharengus*), Blueback herring (*Alosa aestivalis*), American shad (*Alosa sapidissima*), Rainbow smelt (*Osmerus mordax*), Atlantic salmon (*Salmo salar*), captured in fish survey gear by species and by month and zone in 2012. U = upper estuary, M = middle estuary, L = lower estuary. Green indicates the species was caught, red indicates absence of the species in the catch, and gray indicates no fishing effort.

	May			June			July			August			September			October		
Alewife	**U**	**M**	**L**	**U**	**M**	**L**	**U**	**M**	**L**	**U**	**M**	**L**	**U**	**M**	**L**	**U**	**M**	**L**
seine																		
2m fyke																		
1m fyke																		
trawl																		
Blueback herring																		
seine																		
2m fyke																		
1m fyke																		
trawl																		
American shad																		
seine																		
2m fyke																		
1m fyke																		
trawl																		
Rainbow smelt																		
seine																		
2m fyke																		
1m fyke																		
trawl																		
Atlantic salmon																		
seine																		
2m fyke																		
1m fyke																		
trawl																		

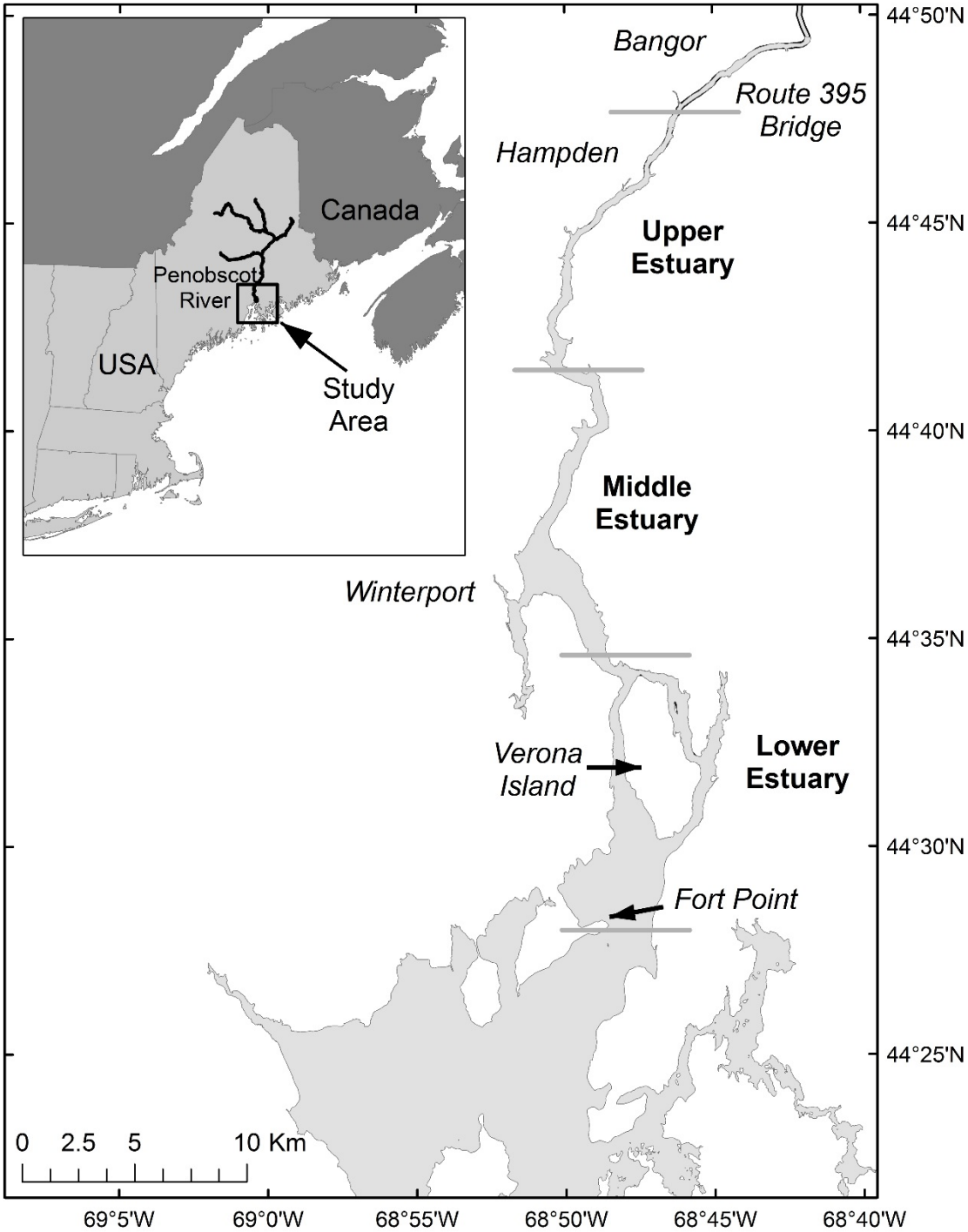

Figure 1. Map of Penobscot River estuary study area with zonal delineations (refined from Haefner 1967) used in survey analysis and place names referenced within the document. Inset map is regional location of study area.

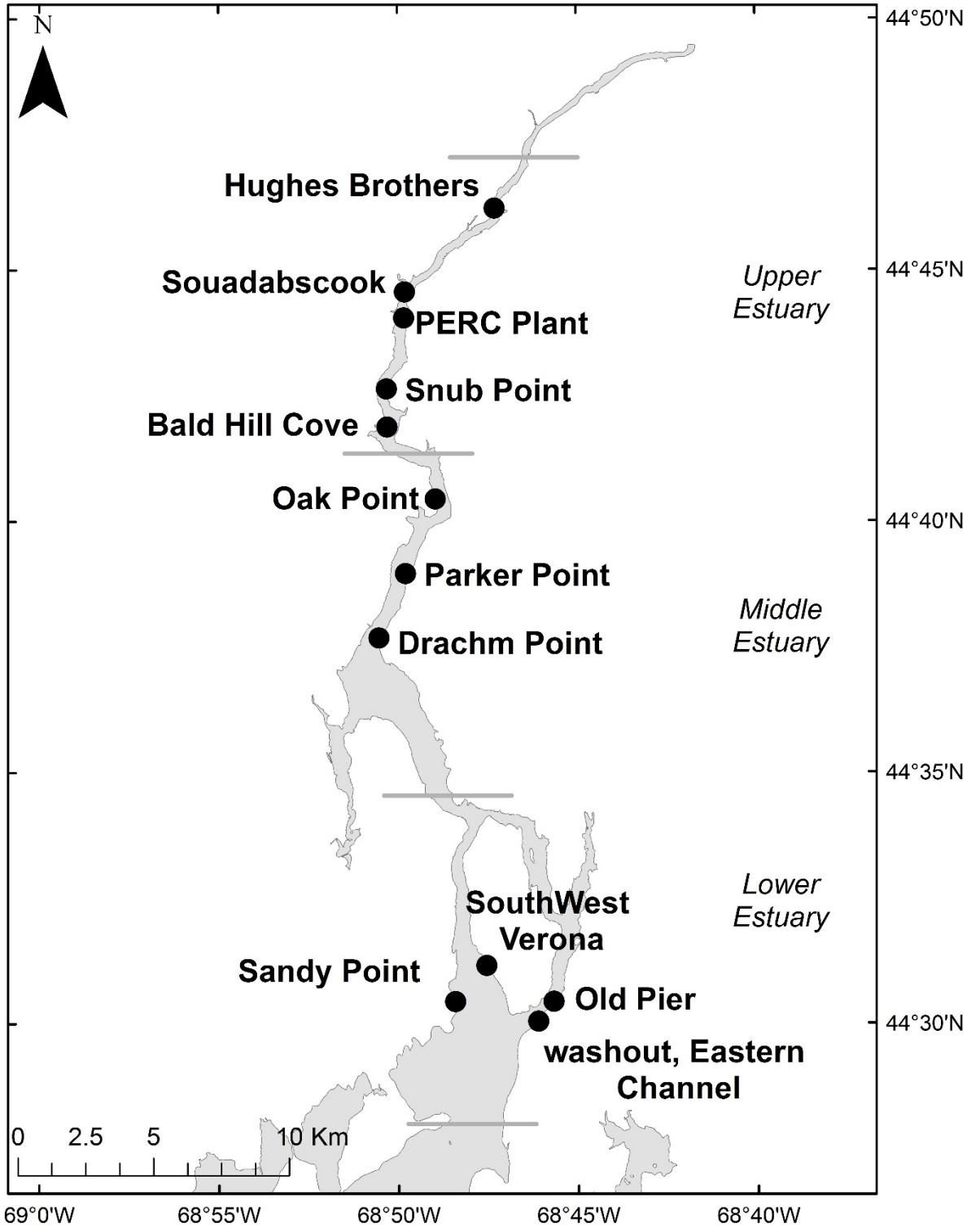

Figure 2. Map of beach seine deployment locations (dots) used from 2010 through 2012 in the Penobscot River estuary survey.

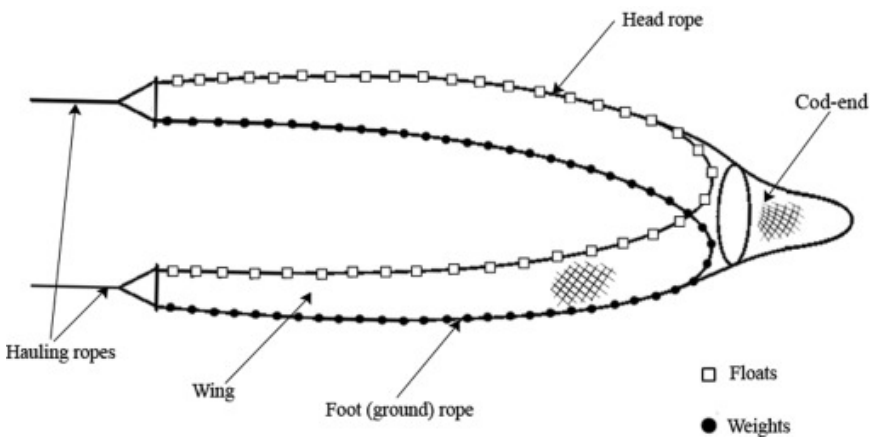

Figure 3. Beach seine diagram (Gunawardena et al. 2016).

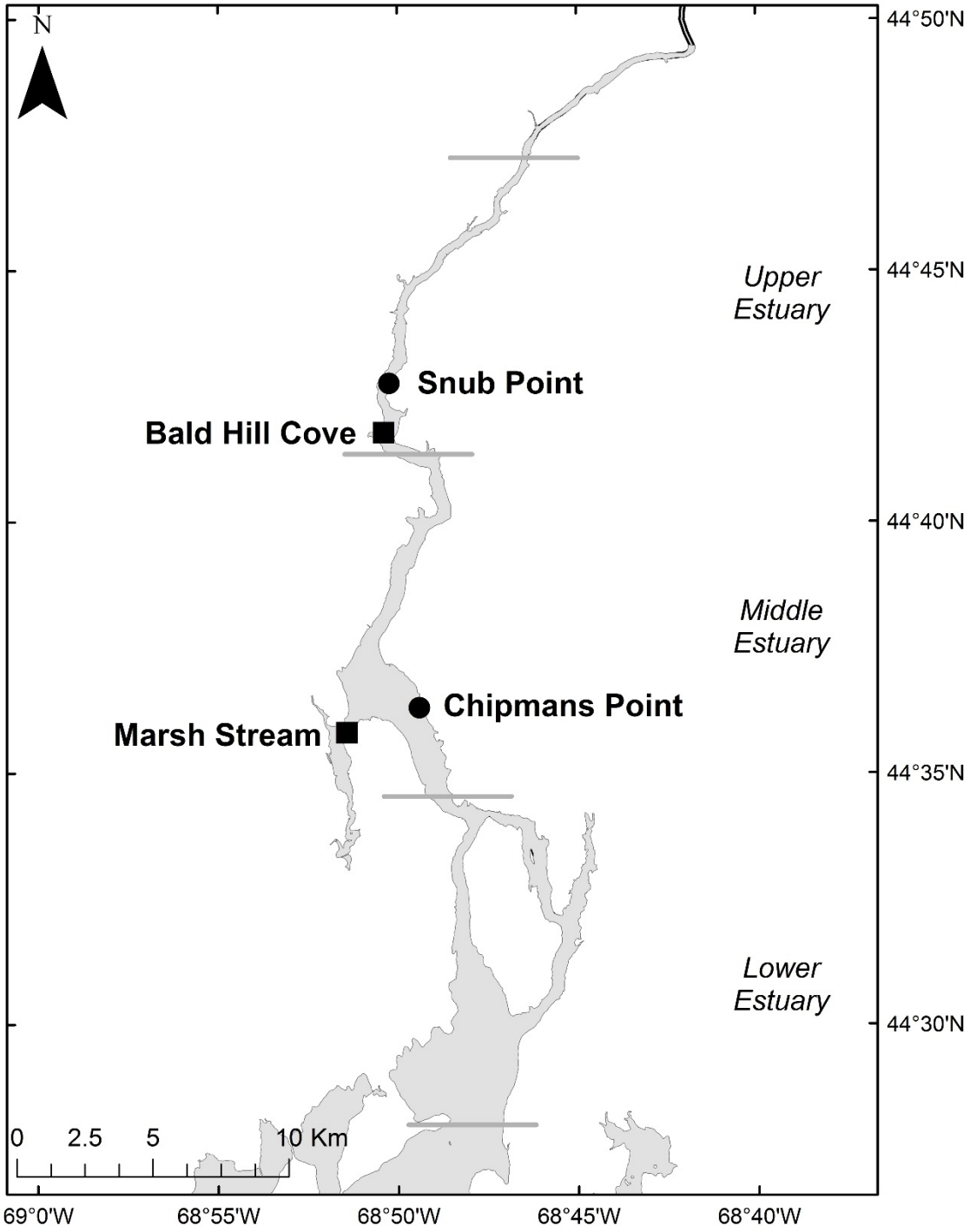

Figure 4. Map of 2-meter (circle) and 1-meter (square) fyke net deployment locations for the Penobscot River estuary survey.

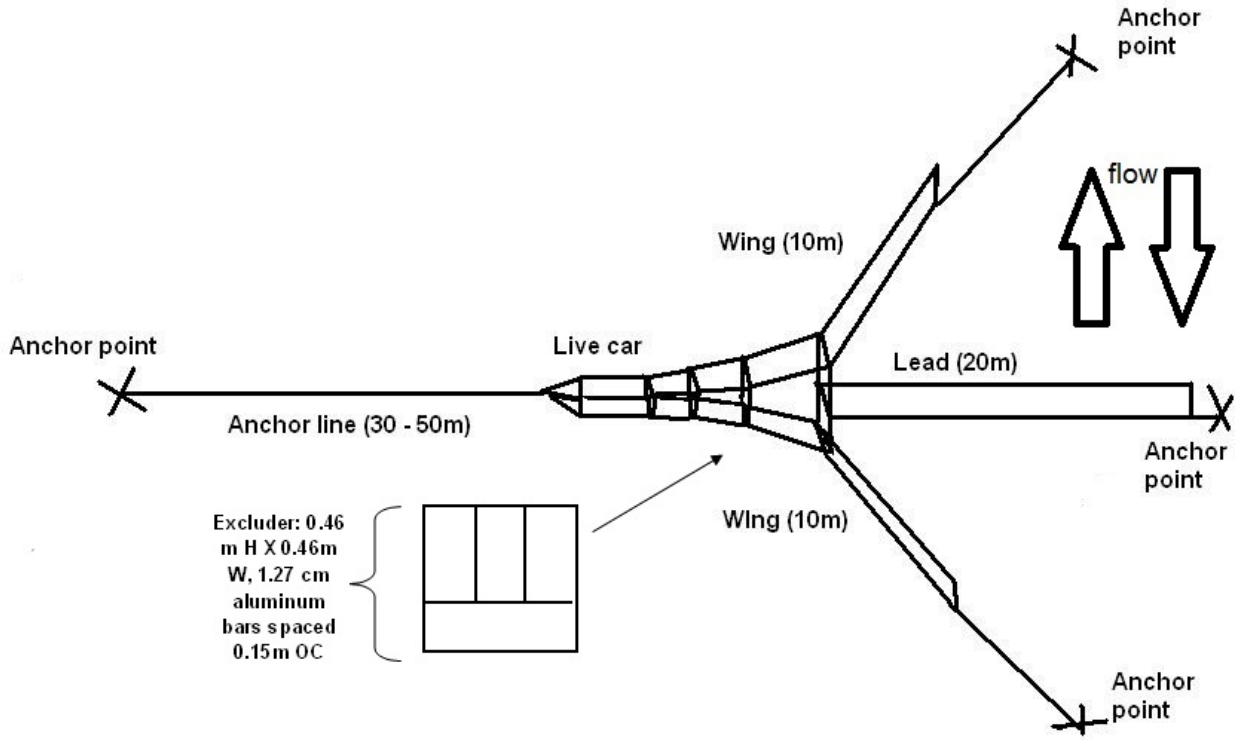

Figure 5. Sketch of 2m fyke net deployment configuration with inset of exclusion device attached to opening of first throat of the net.

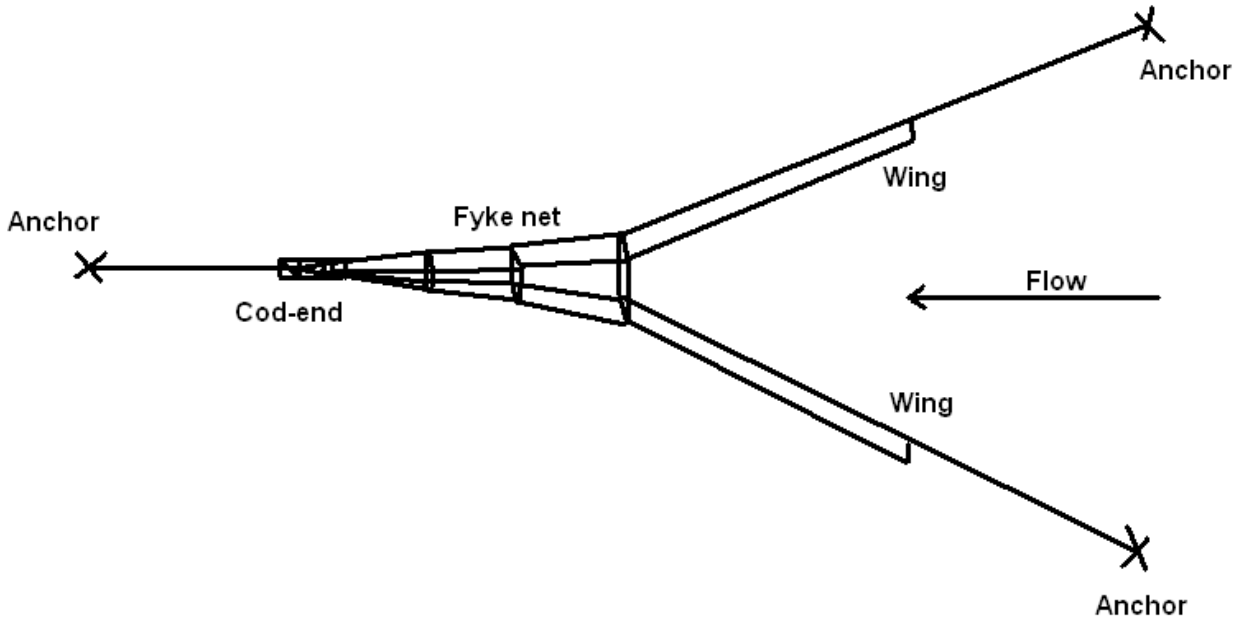

Figure 6. Sketch of 1m fyke net deployment configuration. The wings are shown set at ~30° with frames set in sufficient depth to ensure net was partially submerged at low tide.

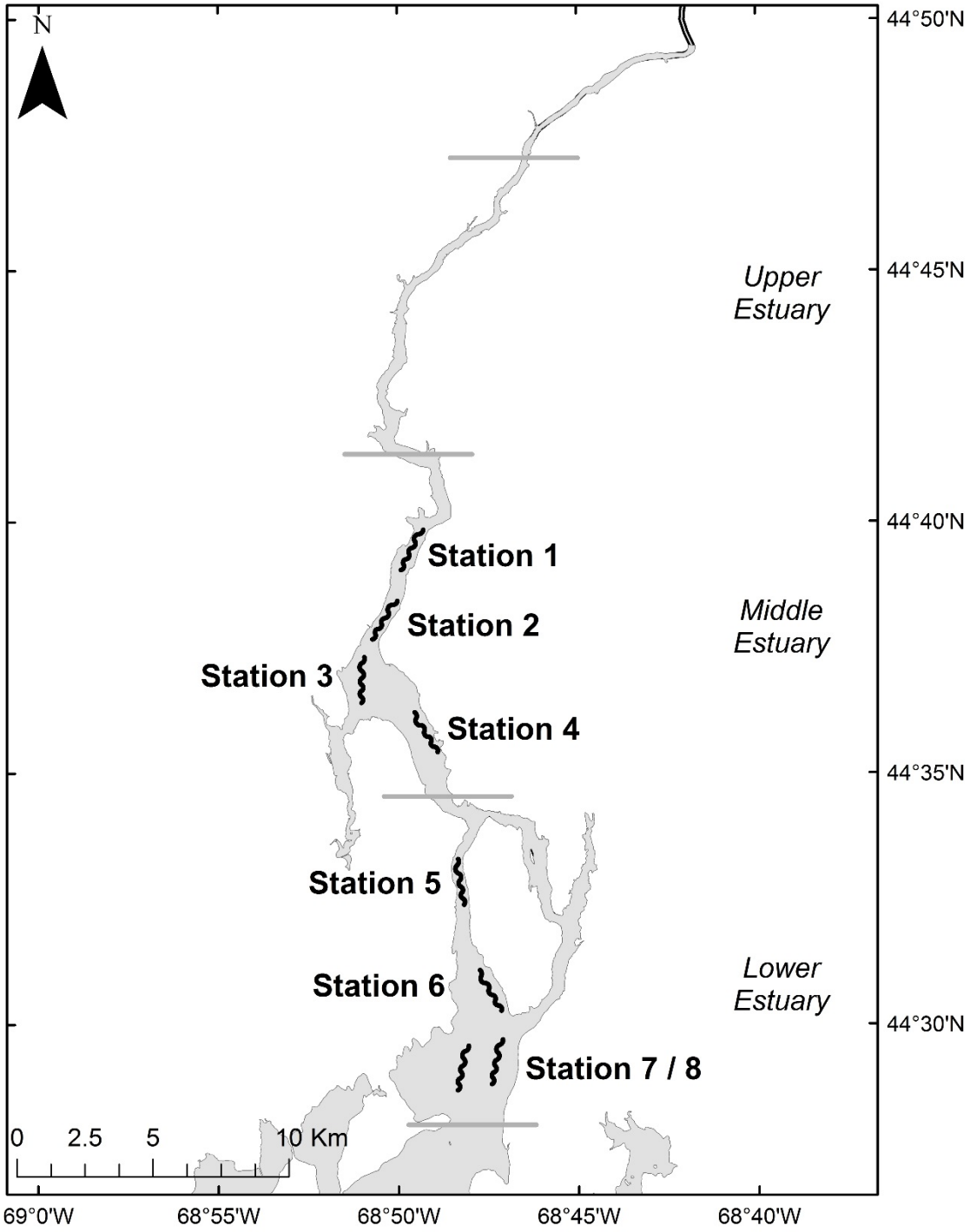

Figure 7. Map of trawl sampling locations (black lines) for the Penobscot River estuary survey.

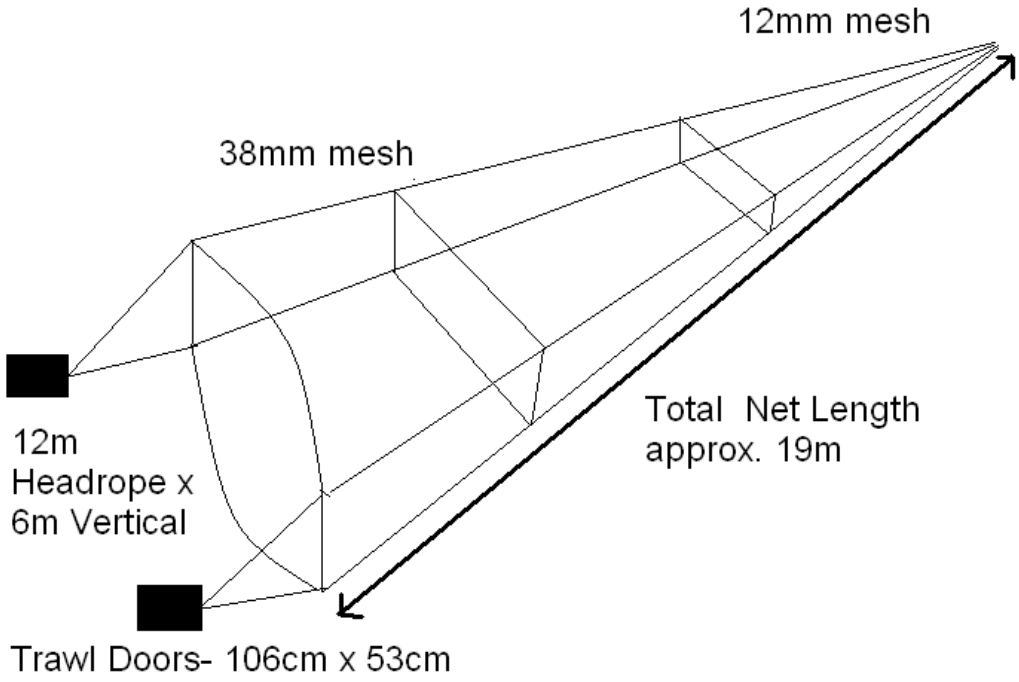

Figure 8. Diagram of Mamou surface trawl used in the Penobscot River estuary survey.

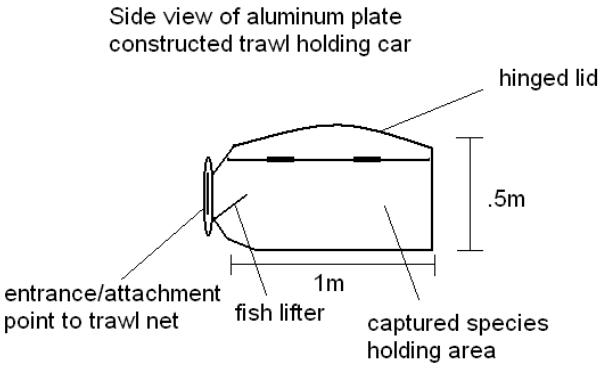

Figure 9. Diagram of aluminum live car for Mamou surface trawl used in the Penobscot River estuary survey.

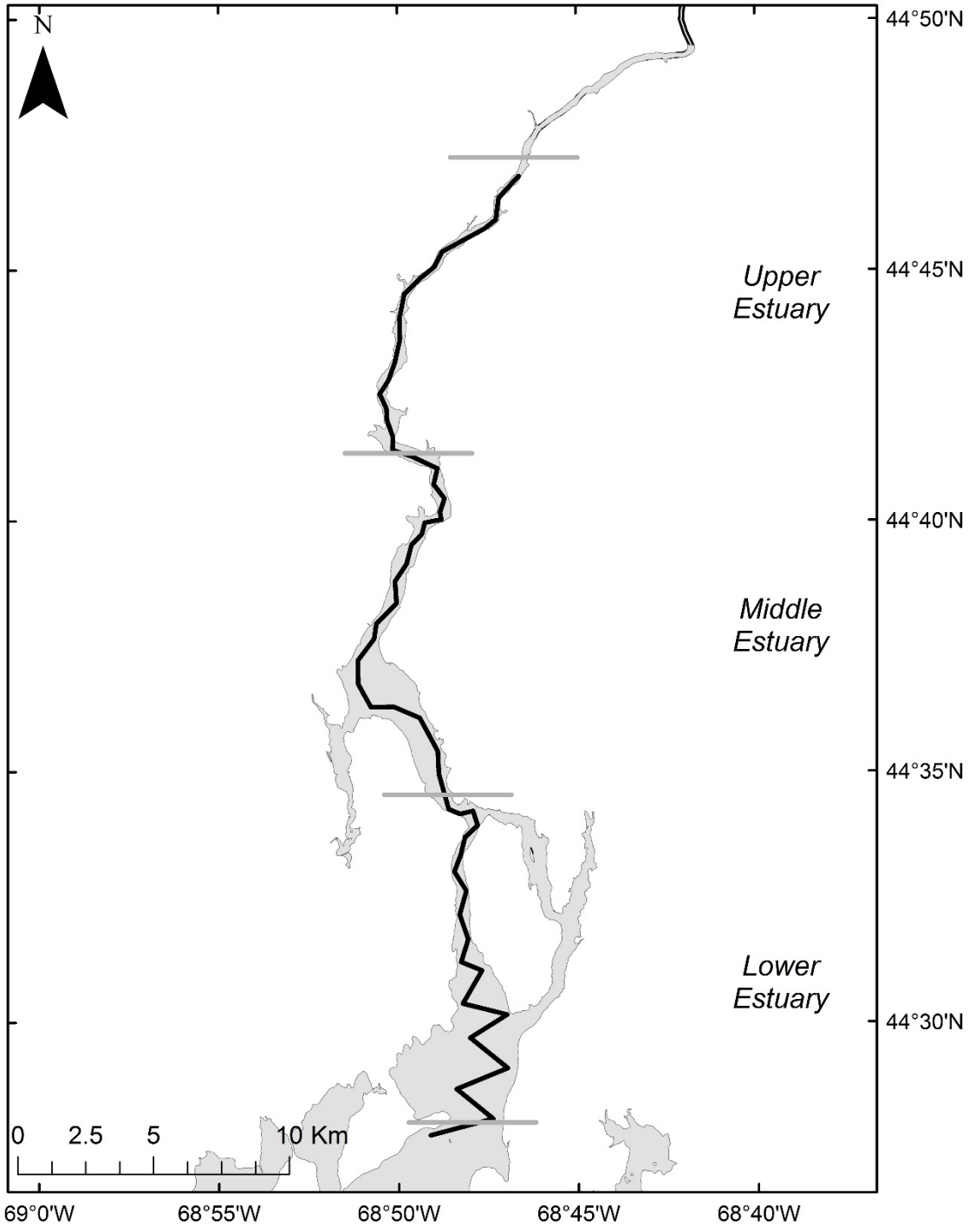

Figure 10. Map of path (black line) used for hydroacoustic transect for the Penobscot River estuary survey.

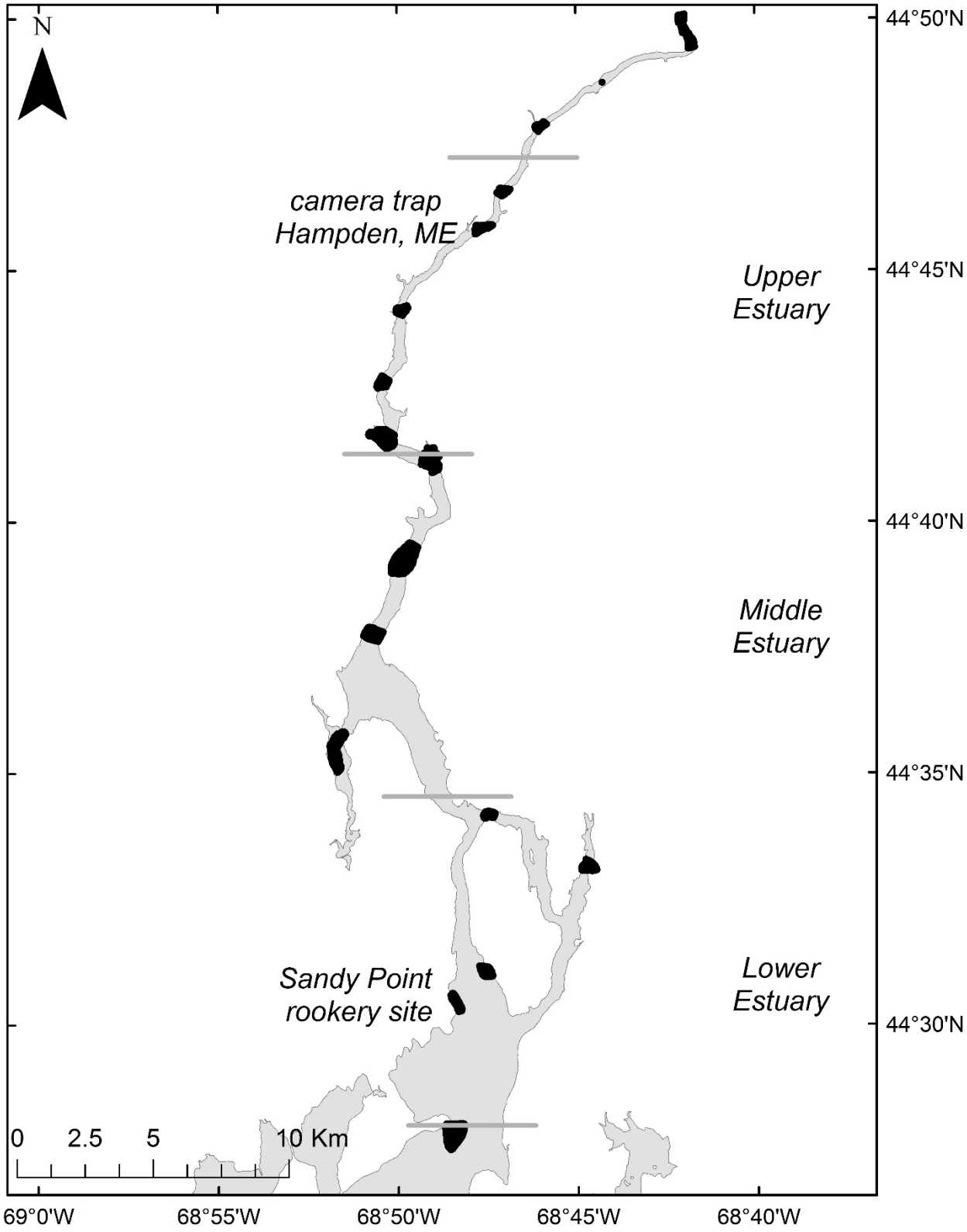

Figure 11. Map of point count sites and visual extent area (black) for the avian and marine mammal survey in 2011, as part of the Penobscot River estuary survey.

Procedures for Issuing Manuscripts in the *Northeast Fisheries Science Center Reference Document* (CRD) Series

Clearance

All manuscripts submitted for issuance as CRDs must have cleared the NEFSC's manuscript/abstract/webpage review process. If any author is not a federal employee, he/she will be required to sign an "NEFSC Release-of-Copyright Form." If your manuscript includes material from another work which has been copyrighted, then you will need to work with the NEFSC's Editorial Office to arrange for permission to use that material by securing release signatures on the "NEFSC Use-of-Copyrighted-Work Permission Form."

For more information, NEFSC authors should see the NEFSC's online publication policy manual, "Manuscript/abstract/webpage preparation, review, and dissemination: NEFSC author's guide to policy, process, and procedure," located in the Publications/Manuscript Review section of the NEFSC intranet page.

Organization

Manuscripts must have an abstract and table of contents, and (if applicable) lists of figures and tables. As much as possible, use traditional scientific manuscript organization for sections: "Introduction," "Study Area" and/or "Experimental Apparatus," "Methods," "Results," "Discussion," "Conclusions," "Acknowledgments," and "Literature/References Cited."

Style

The CRD series is obligated to conform with the style contained in the current edition of the United States Government Printing Office Style Manual. That style manual is silent on many aspects of scientific manuscripts. The CRD series relies more on the CSE Style Manual. Manuscripts should be prepared to conform with these style manuals.

The CRD series uses the American Fisheries Society's guides to names of fishes, mollusks, and decapod crustaceans, the Society for Marine Mammalogy's guide to names of marine mammals, the Biosciences Information Service's guide to serial title abbreviations, and the ISO's (International Standardization Organization) guide to statistical terms.

For in-text citation, use the name-date system. A special effort should be made to ensure that all necessary bibliographic information is included in the list of cited works. Personal communications must include date, full name, and full mailing address of the contact.

Preparation

Once your document has cleared the review process, the Editorial Office will contact you with publication needs – for example, revised text (if necessary) and separate digital figures and tables if they are embedded in the document. Materials may be submitted to the Editorial Office as files on zip disks or CDs, email attachments, or intranet downloads. Text files should be in Microsoft Word, tables may be in Word or Excel, and graphics files may be in a variety of formats (JPG, GIF, Excel, PowerPoint, etc.).

Production and Distribution

The Editorial Office will perform a copy-edit of the document and may request further revisions. The Editorial Office will develop the inside and outside front covers, the inside and outside back covers, and the title and bibliographic control pages of the document.

Once both the PDF (print) and Web versions of the CRD are ready, the Editorial Office will contact you to review both versions and submit corrections or changes before the document is posted online.

A number of organizations and individuals in the Northeast Region will be notified by e-mail of the availability of the document online.

Research Communications Branch
Northeast Fisheries Science Center
National Marine Fisheries Service, NOAA
166 Water St.
Woods Hole, MA 02543-1026

MEDIA MAIL

Publications and Reports of the Northeast Fisheries Science Center

The mission of NOAA's National Marine Fisheries Service (NMFS) is "stewardship of living marine resources for the benefit of the nation through their science-based conservation and management and promotion of the health of their environment." As the research arm of the NMFS's Northeast Region, the Northeast Fisheries Science Center (NEFSC) supports the NMFS mission by "conducting ecosystem-based research and assessments of living marine resources, with a focus on the Northeast Shelf, to promote the recovery and long-term sustainability of these resources and to generate social and economic opportunities and benefits from their use." Results of NEFSC research are largely reported in primary scientific media (*e.g.*, anonymously-peer-reviewed scientific journals). However, to assist itself in providing data, information, and advice to its constituents, the NEFSC occasionally releases its results in its own media. Currently, there are three such media:

NOAA Technical Memorandum NMFS-NE -- This series is issued irregularly. The series typically includes: data reports of long-term field or lab studies of important species or habitats; synthesis reports for important species or habitats; annual reports of overall assessment or monitoring programs; manuals describing program-wide surveying or experimental techniques; literature surveys of important species or habitat topics; proceedings and collected papers of scientific meetings; and indexed and/or annotated bibliographies. All issues receive internal scientific review and most issues receive technical and copy editing.

Northeast Fisheries Science Center Reference Document -- This series is issued irregularly. The series typically includes: data reports on field and lab studies; progress reports on experiments, monitoring, and assessments; background papers for, collected abstracts of, and/or summary reports of scientific meetings; and simple bibliographies. Issues receive internal scientific review and most issues receive copy editing.

Resource Survey Report (formerly *Fishermen's Report*) -- This information report is a regularly-issued, quick-turnaround report on the distribution and relative abundance of selected living marine resources as derived from each of the NEFSC's periodic research vessel surveys of the Northeast's continental shelf. This report undergoes internal review, but receives no technical or copy editing.

TO OBTAIN A COPY of a *NOAA Technical Memorandum NMFS-NE* or a *Northeast Fisheries Science Center Reference Document*, either contact the NEFSC Editorial Office (166 Water St., Woods Hole, MA 02543-1026; 508-495-2350) or consult the NEFSC webpage on "Reports and Publications" (http://www.nefsc.noaa.gov/nefsc/publications/). To access *Resource Survey Report*, consult the Ecosystem Surveys Branch webpage (http://www.nefsc.noaa.gov/femad/ecosurvey/mainpage/).

ANY USE OF TRADE OR BRAND NAMES IN ANY NEFSC PUBLICATION OR REPORT DOES NOT IMPLY ENDORSEMENT.